PREMIUM PVC LED LIGHTBOX

6000 Wide

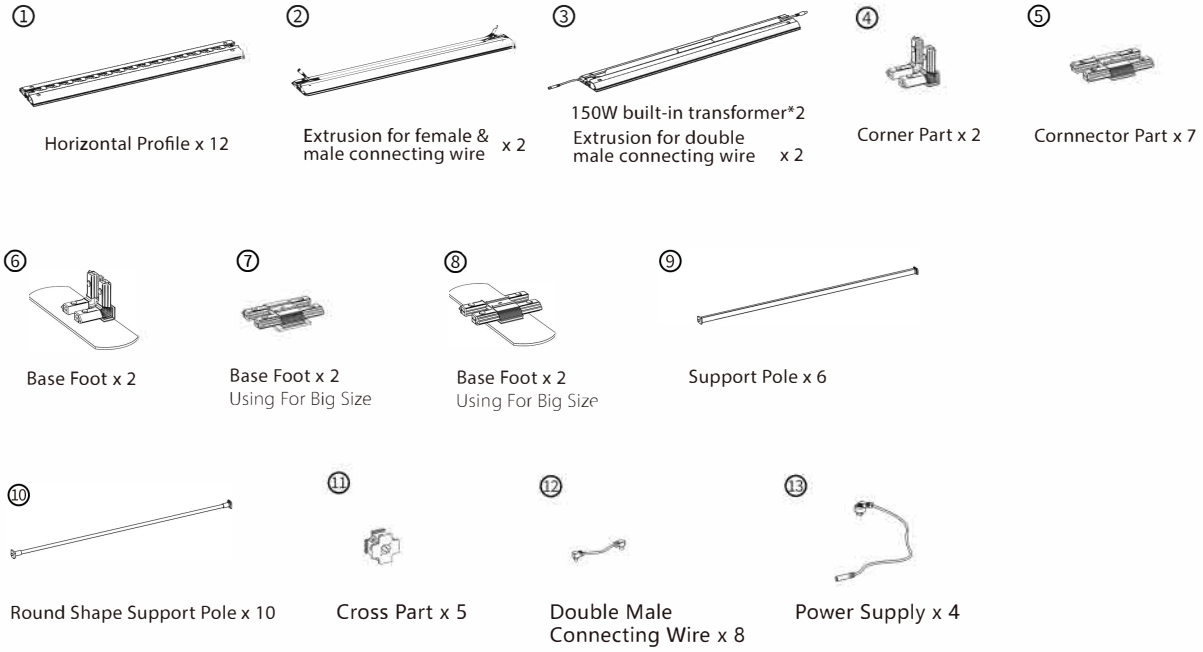

1

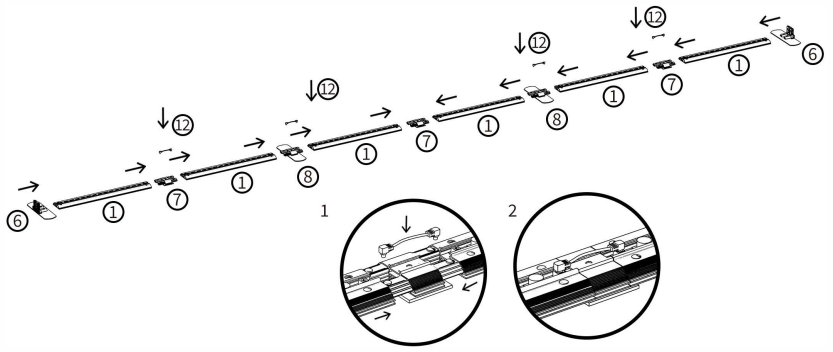

2

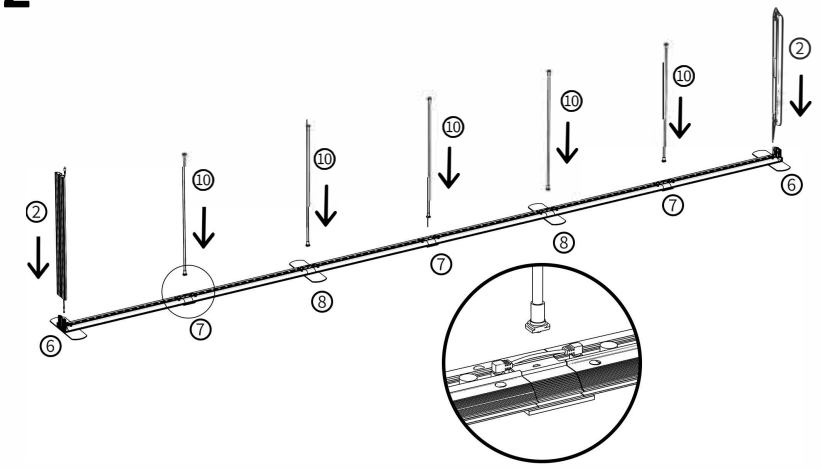

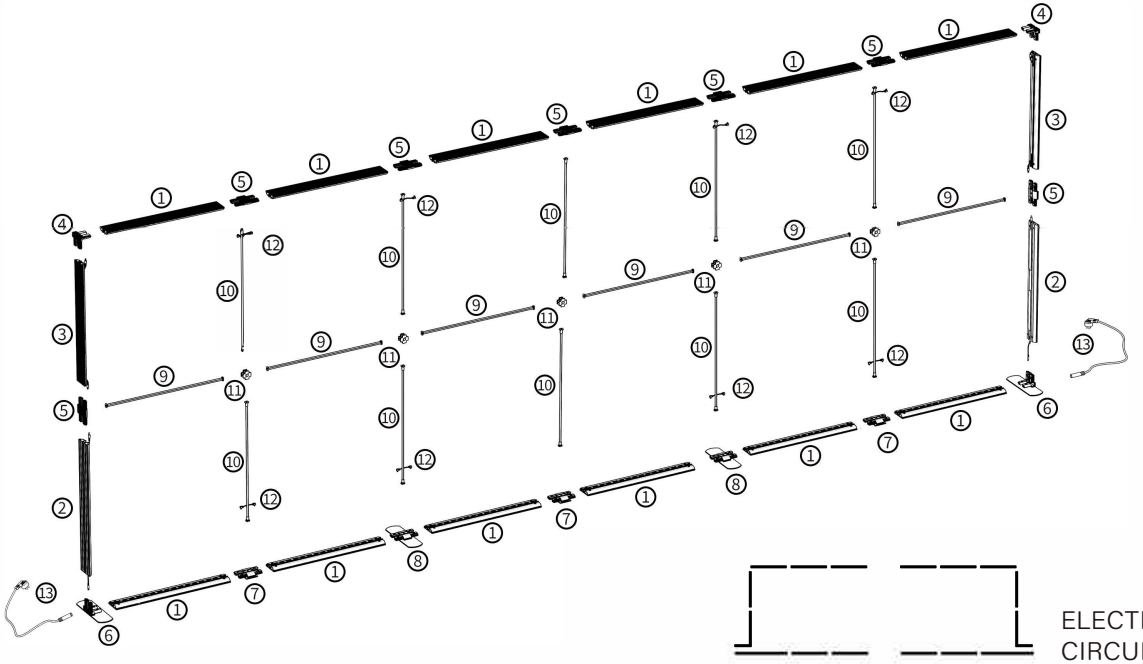

ELECTRIC
CIRCUIT LAYOUT

3

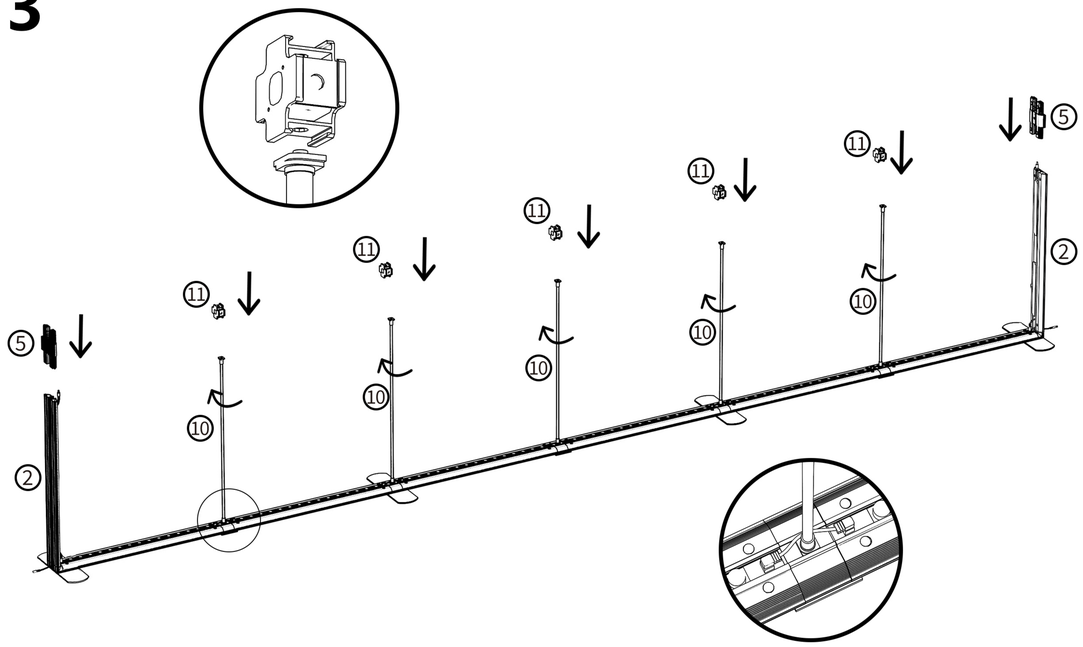

4

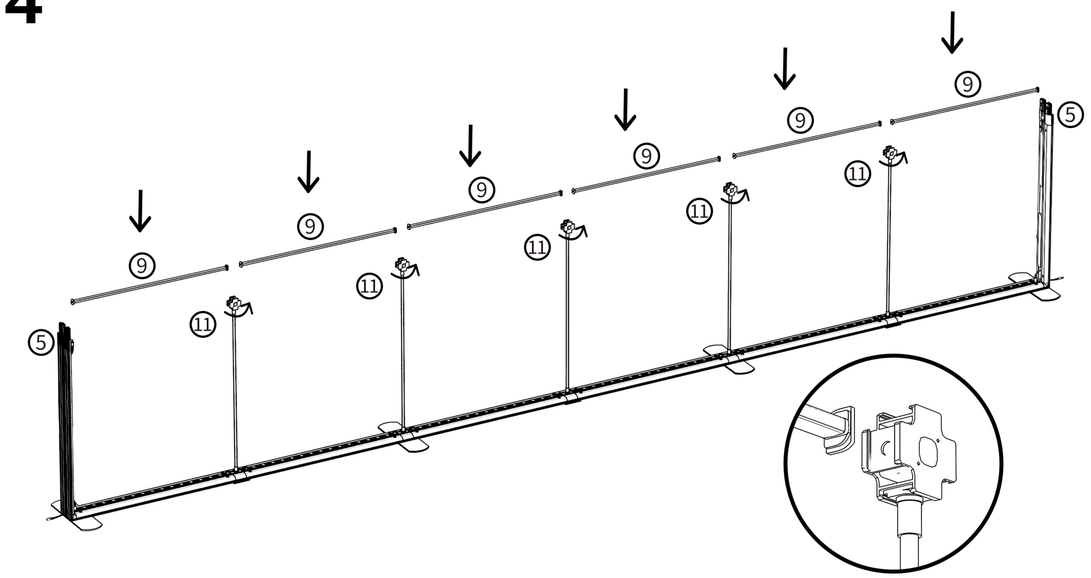

5

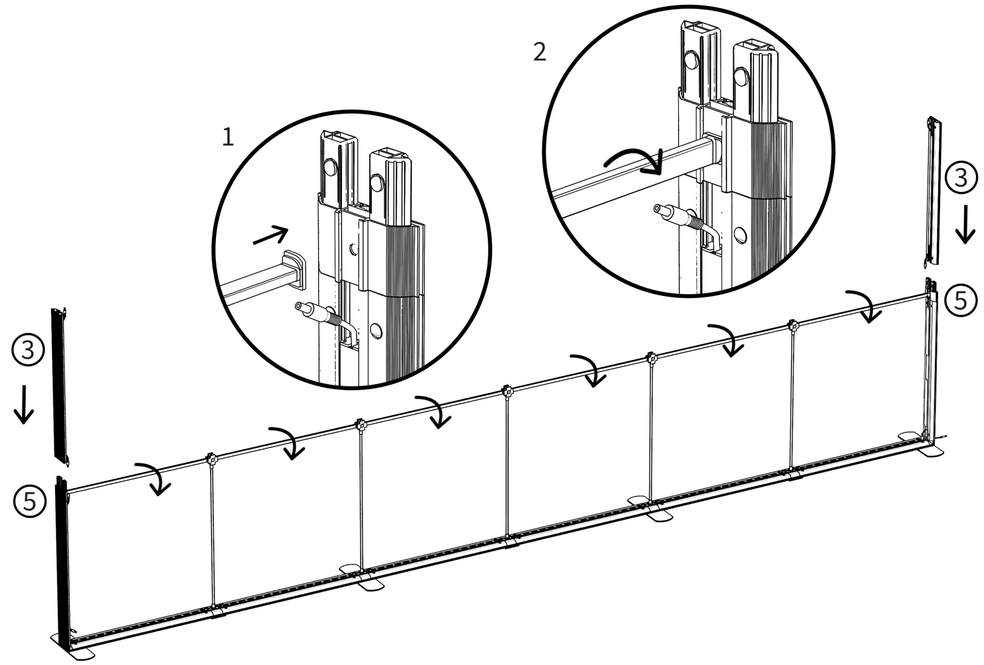

6

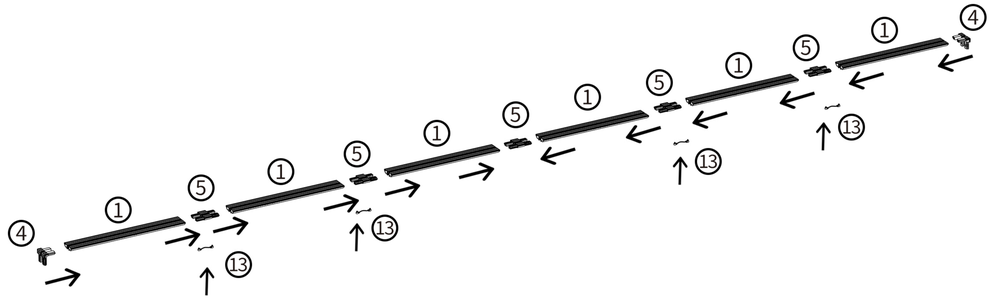

7

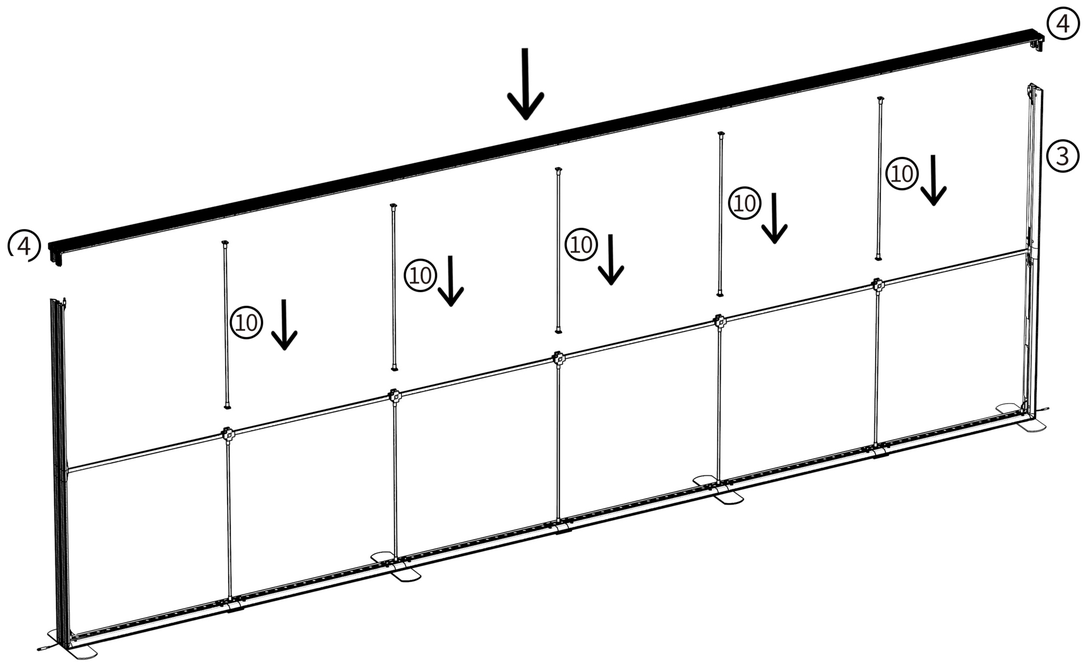

8

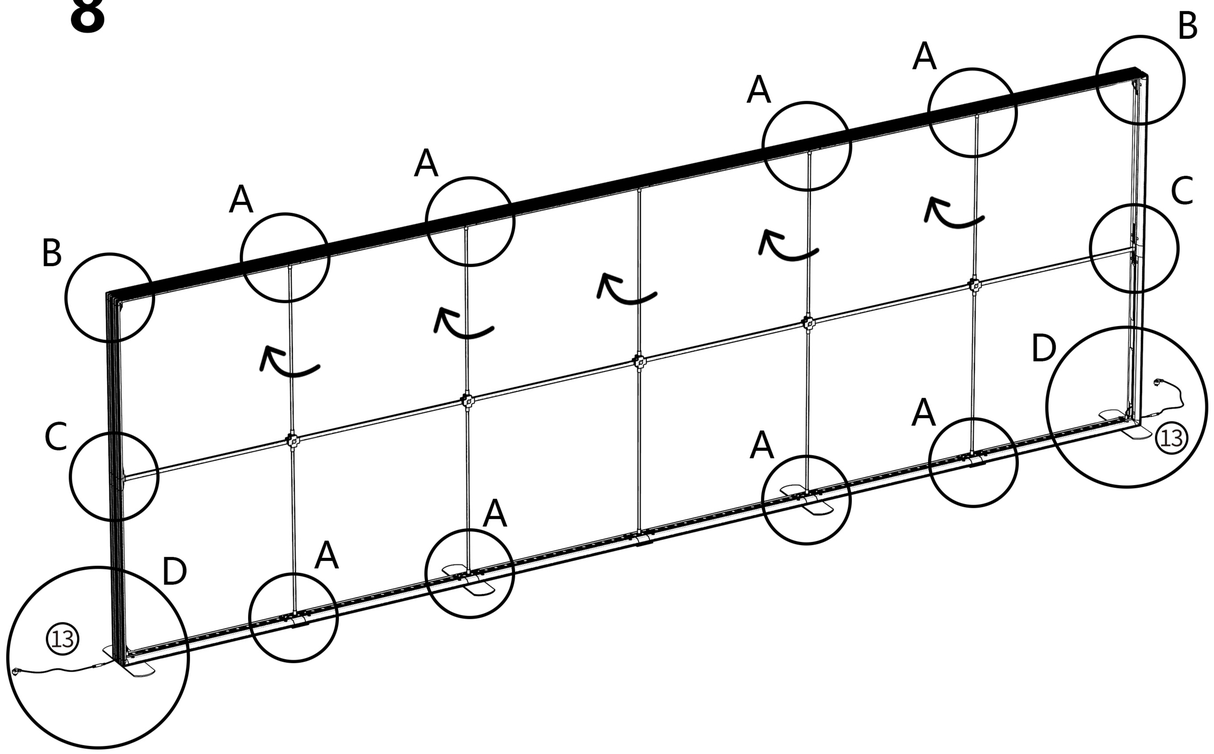

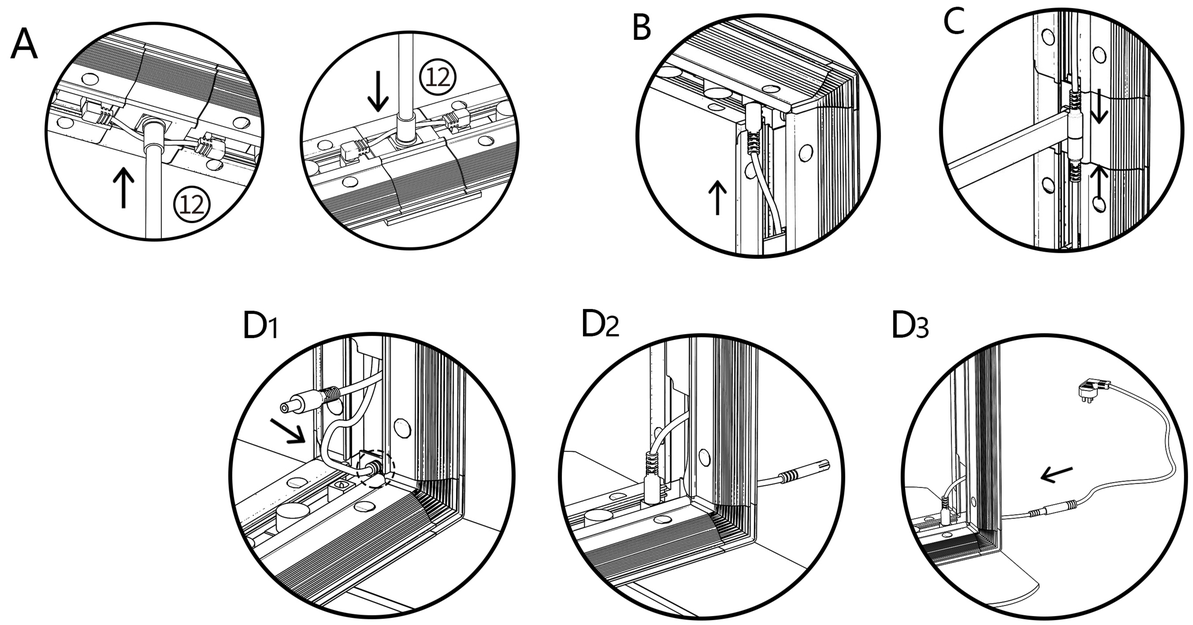
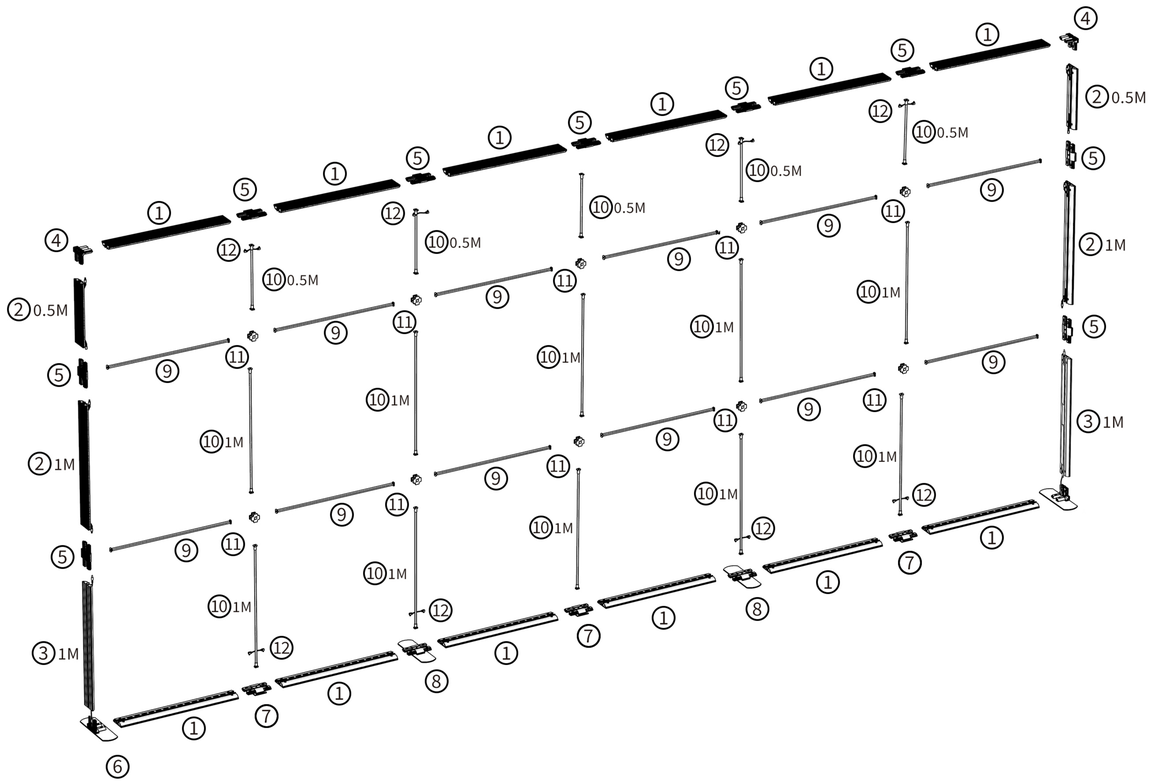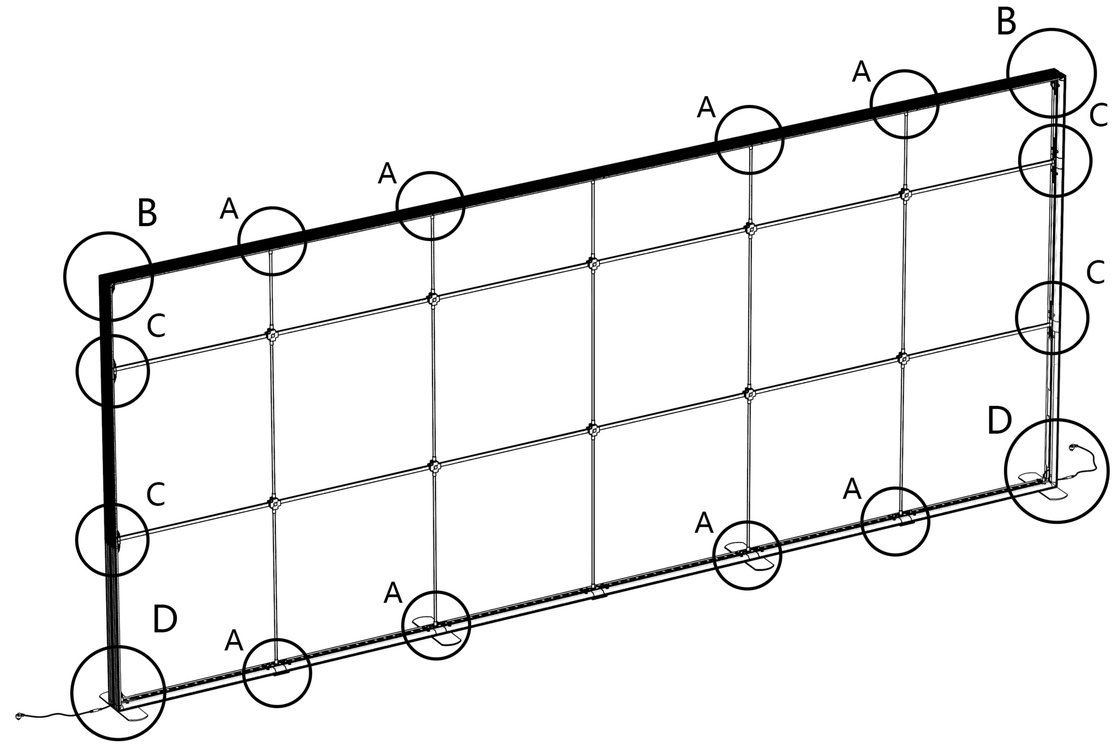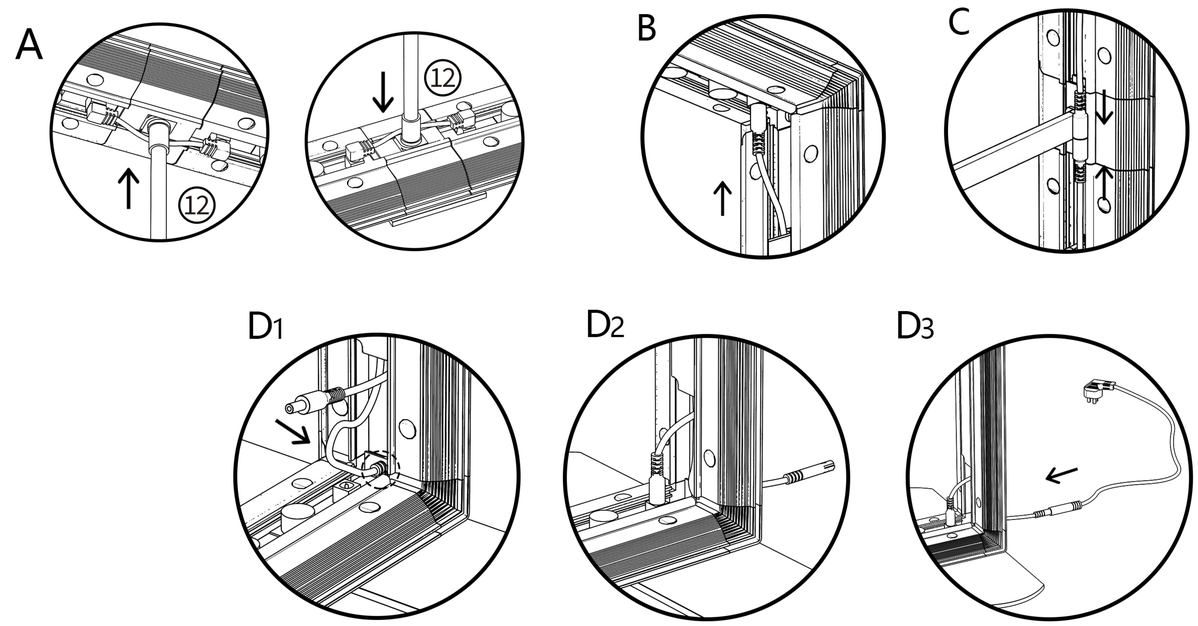
5500/5850/6000X2500(1000+1000+500)