PREMIUM PVC LED LIGHTBOX

5000 Wide

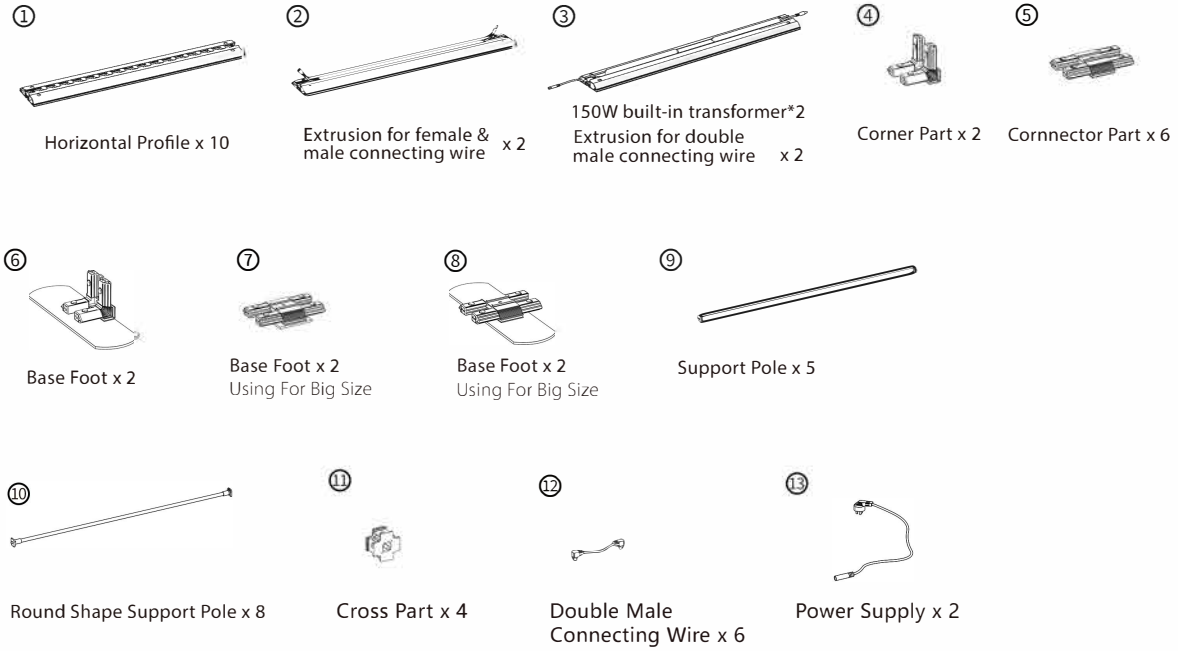

1

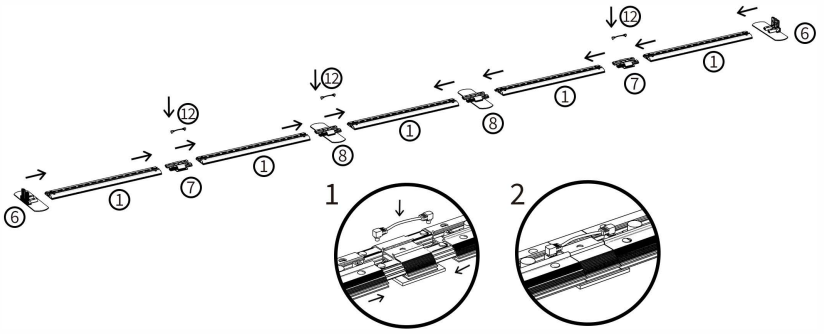

2

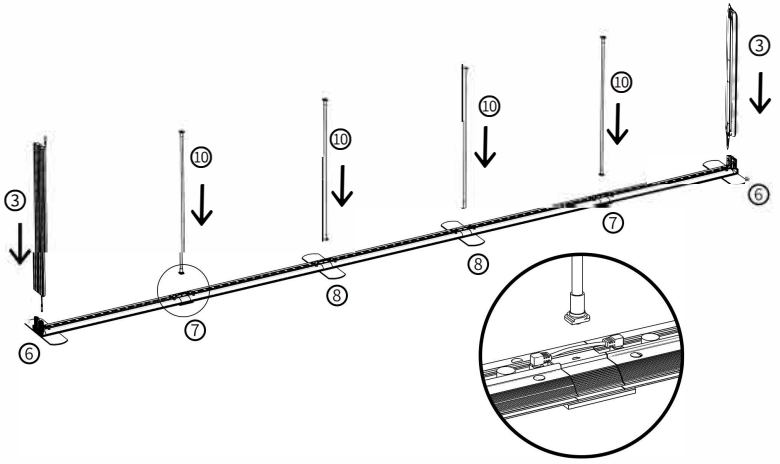

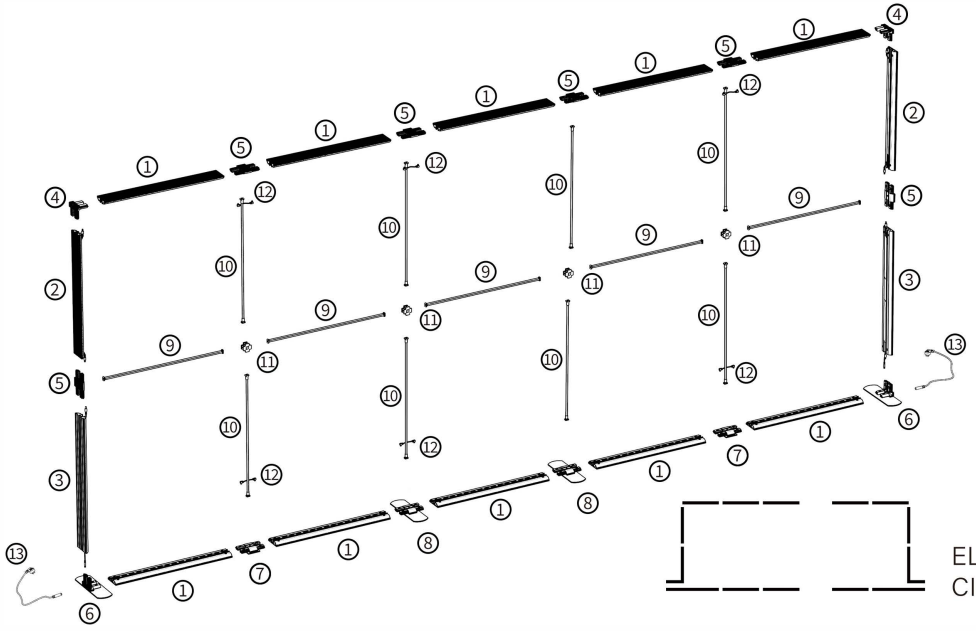

ELECTRIC
CIRCUIT LAYOUT

3

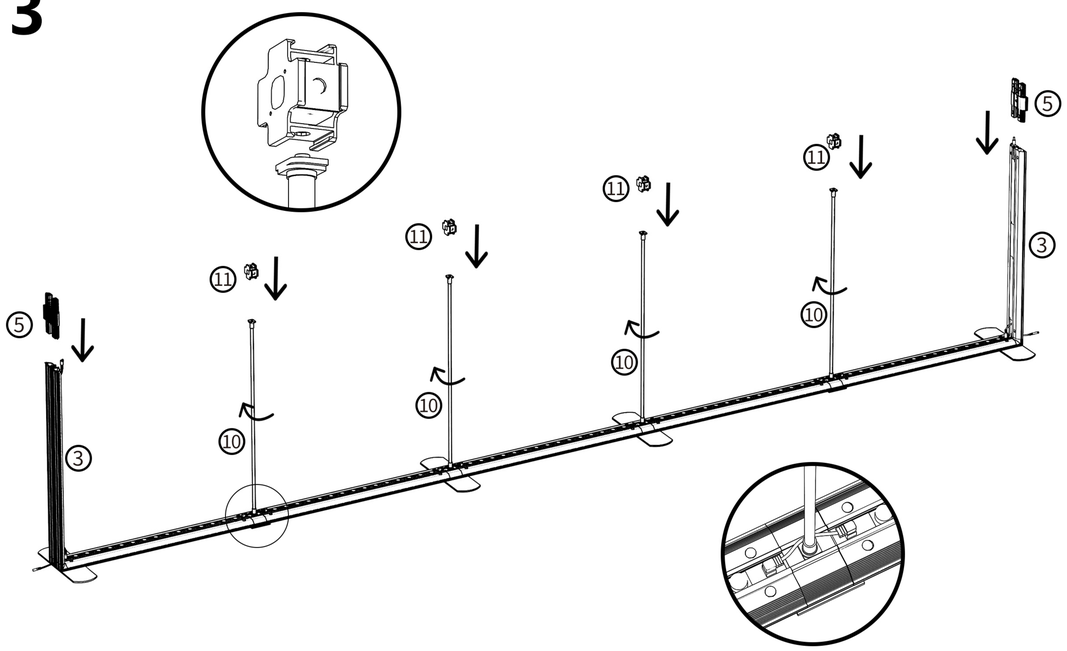

4

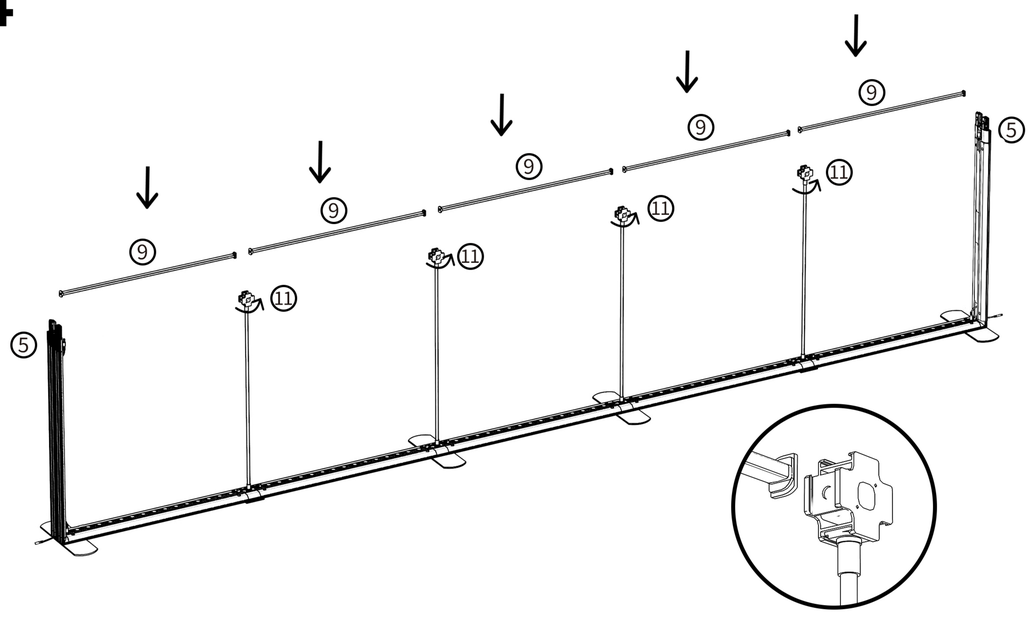

5

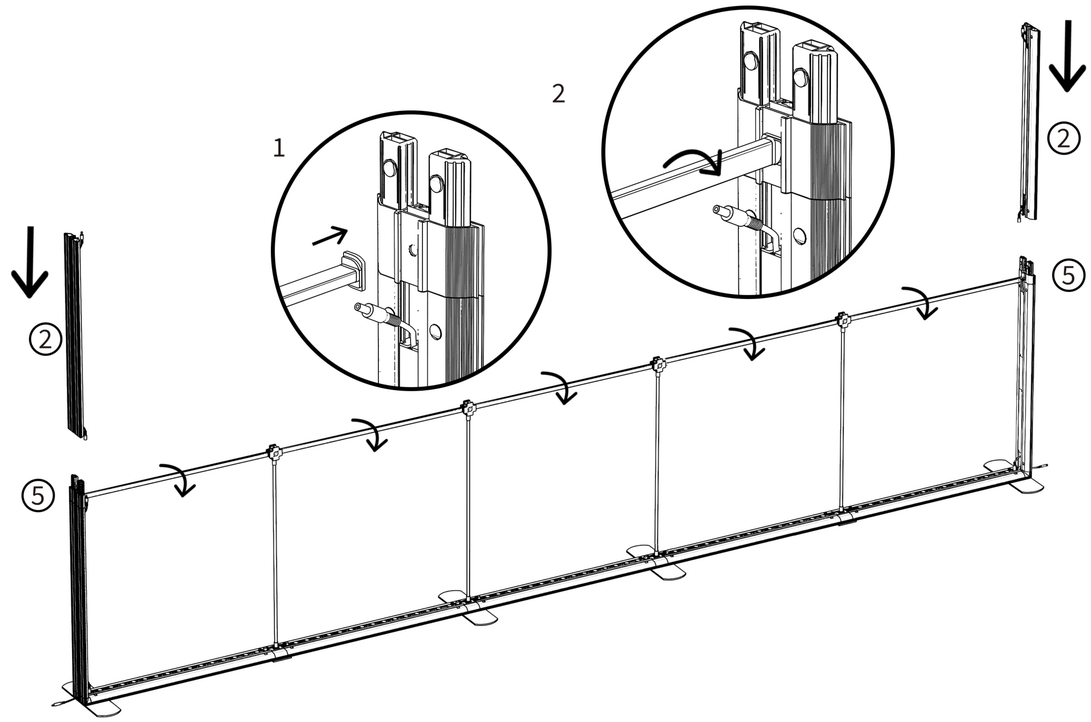

6

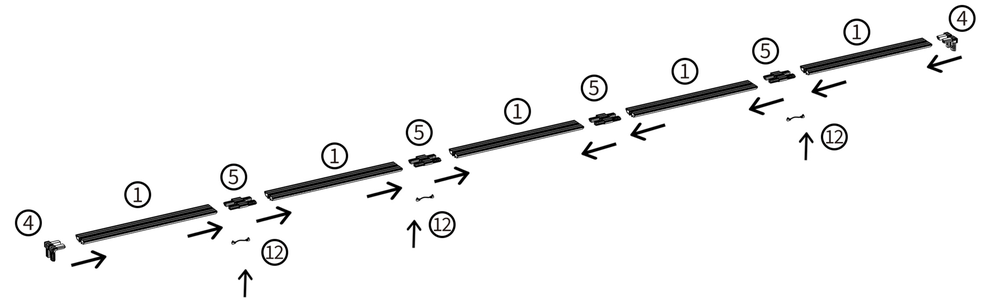

7

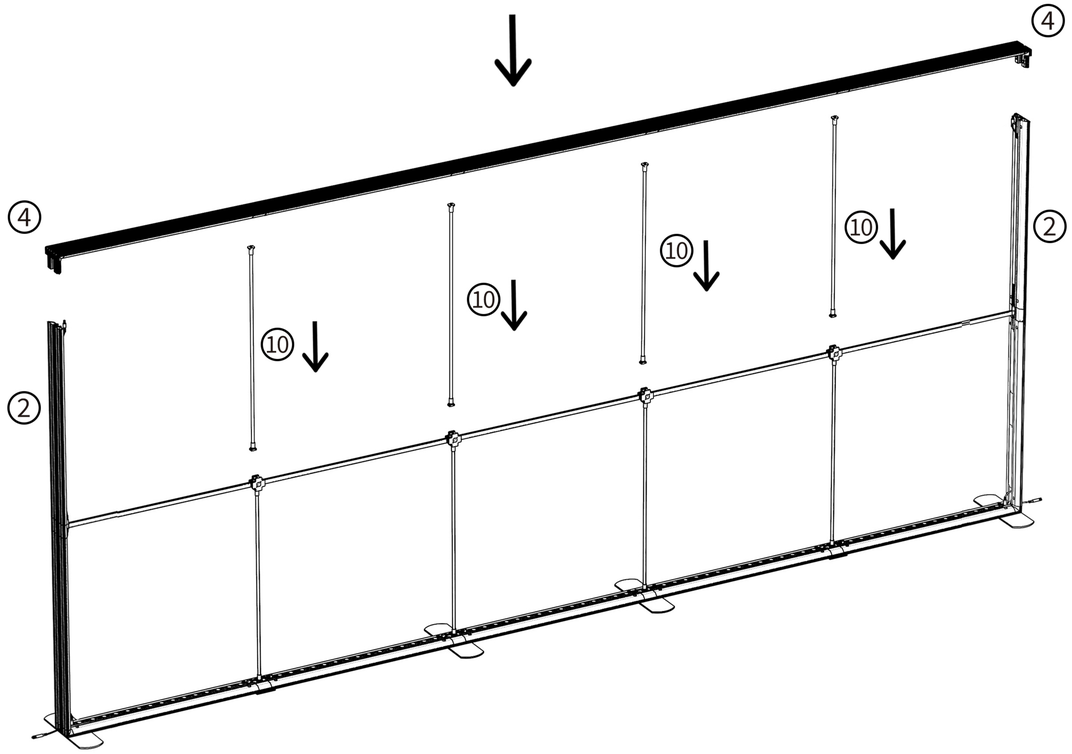

8

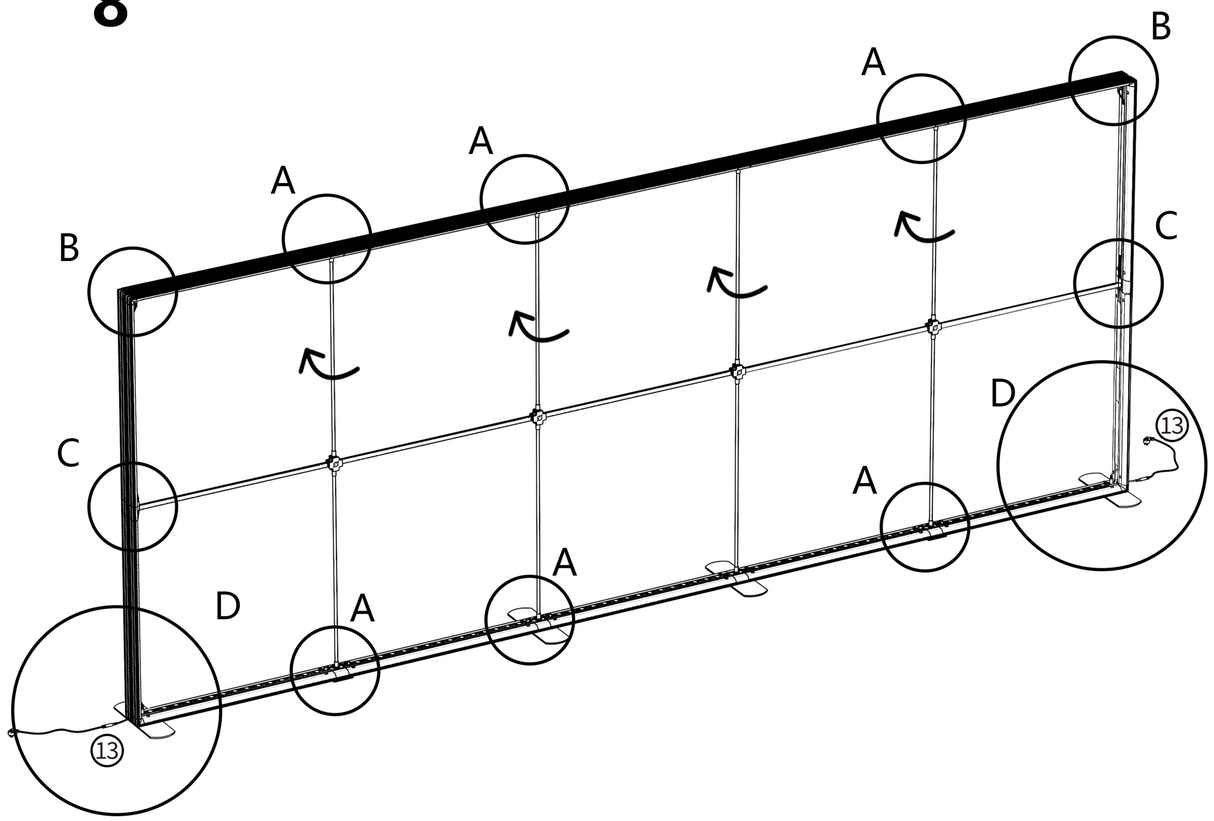

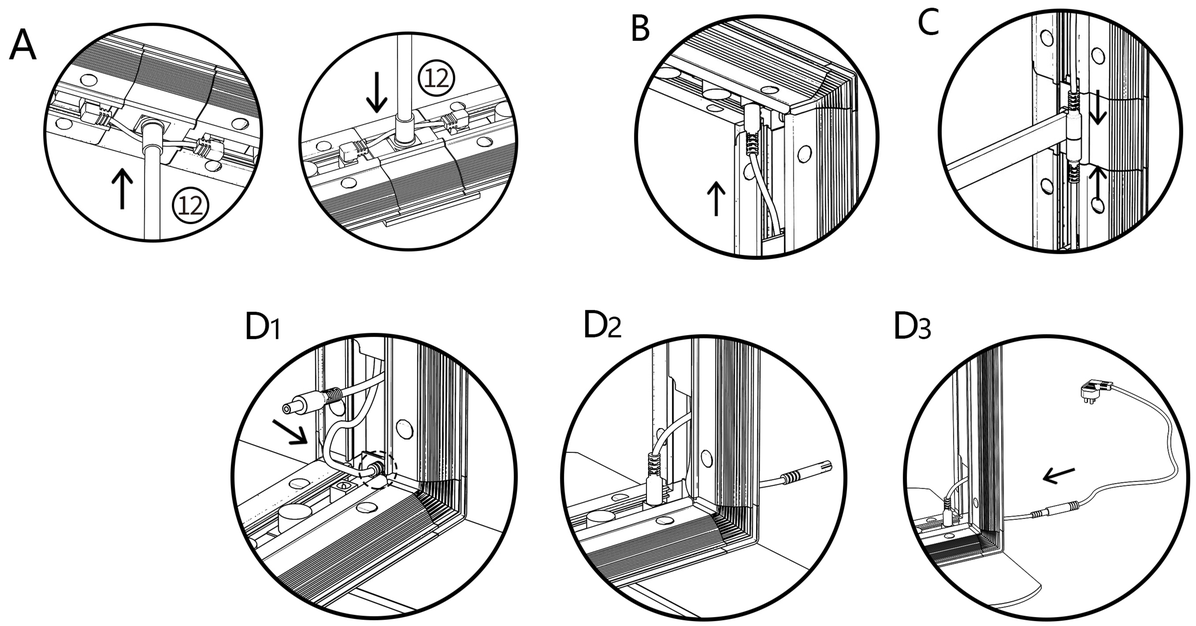

4500/4850/5000X2500(1000+1000+500)

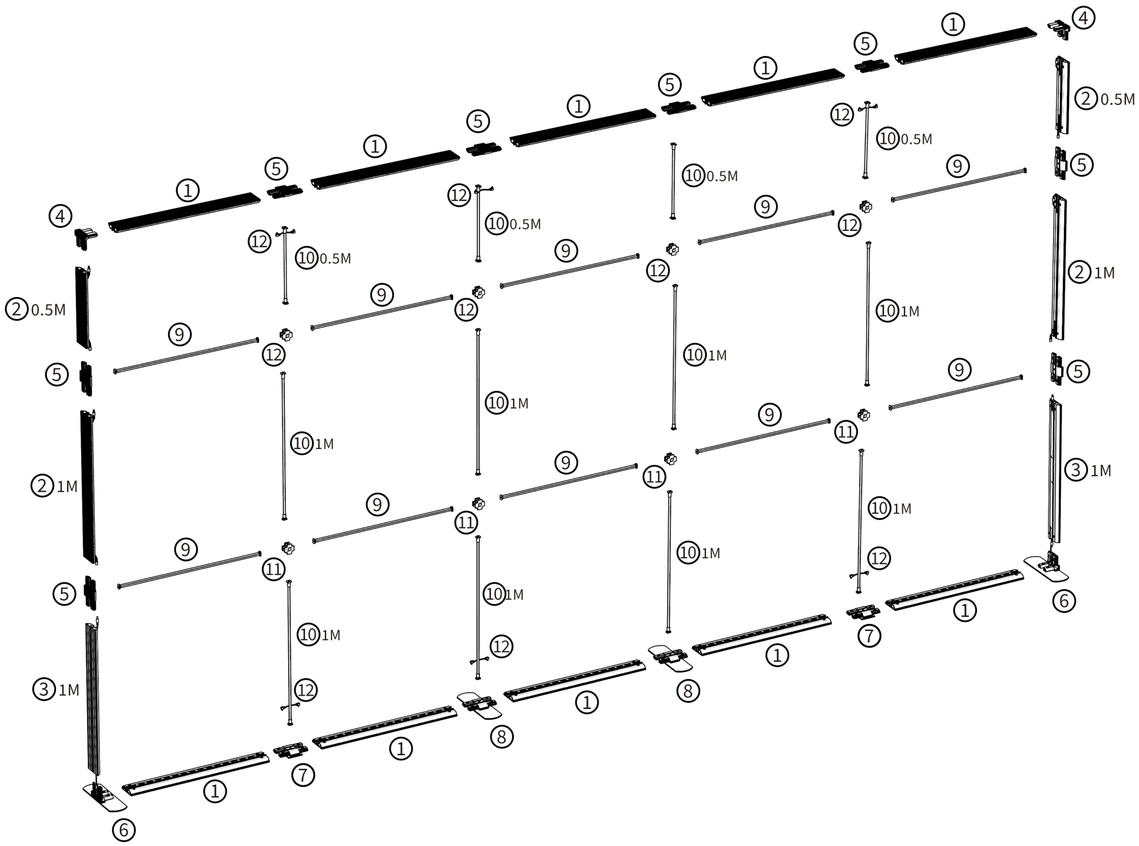

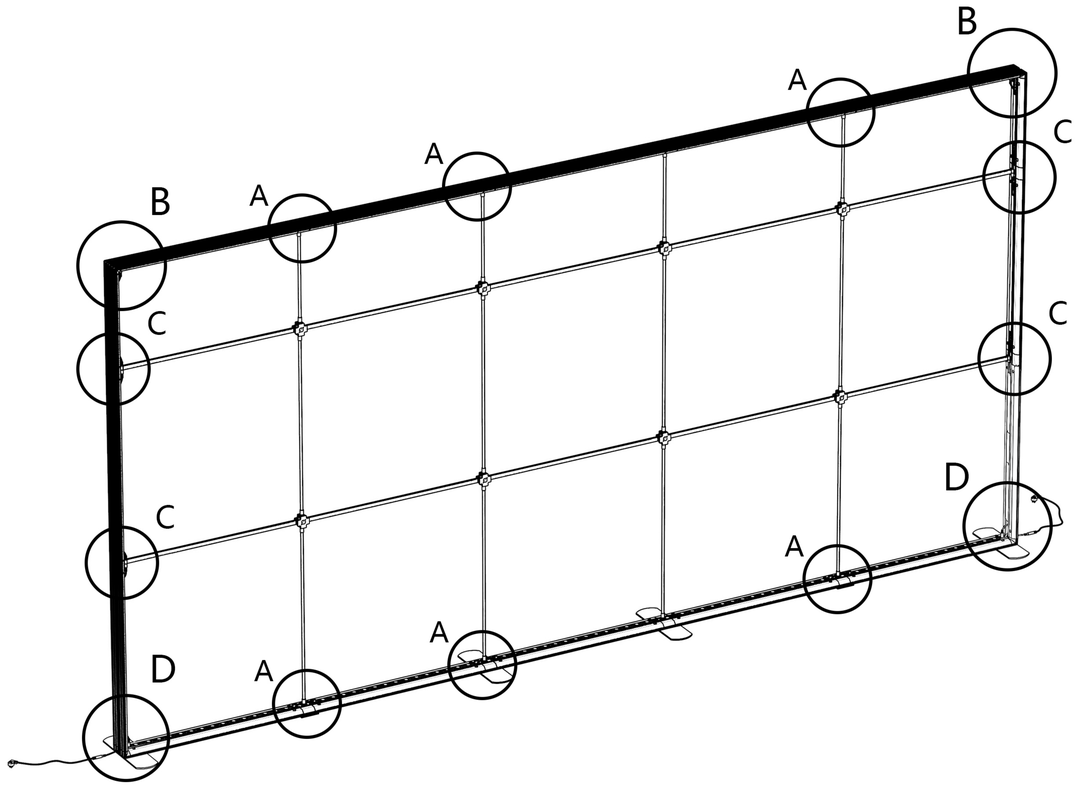

A

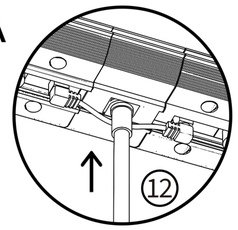

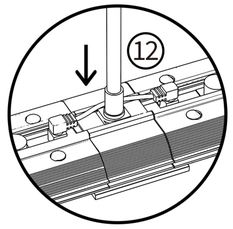

B

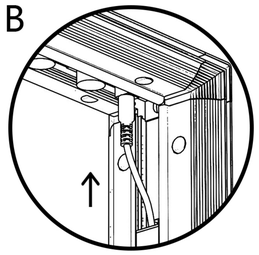

C

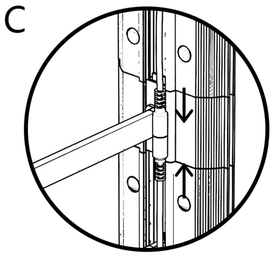

D1

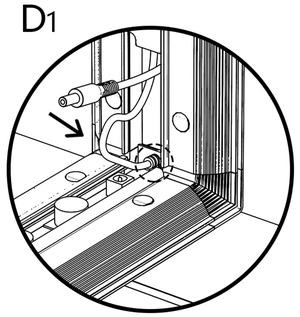

D2

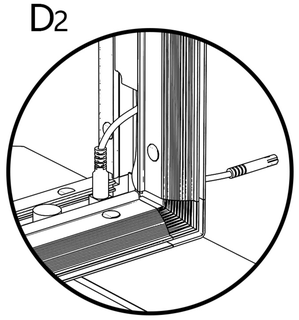
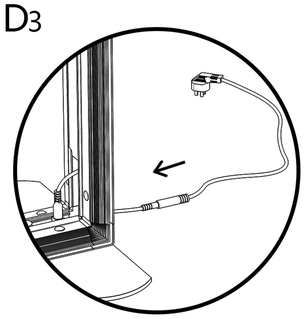
D3