PREMIUM PVC LED LIGHTBOX

4000 Wide

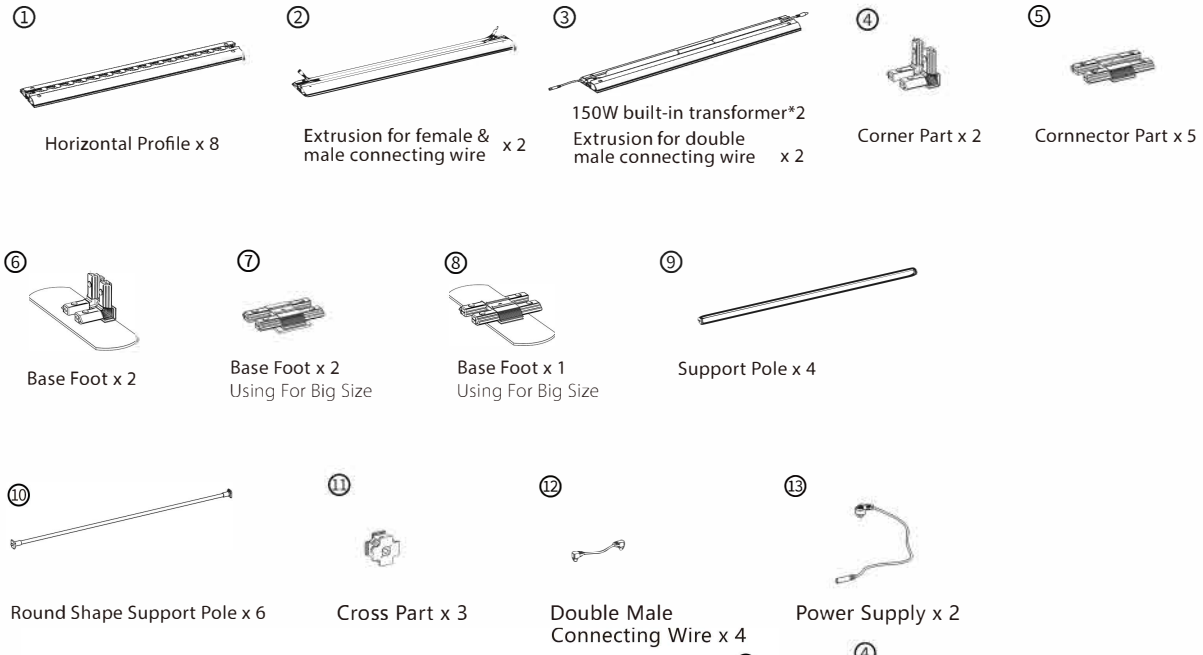

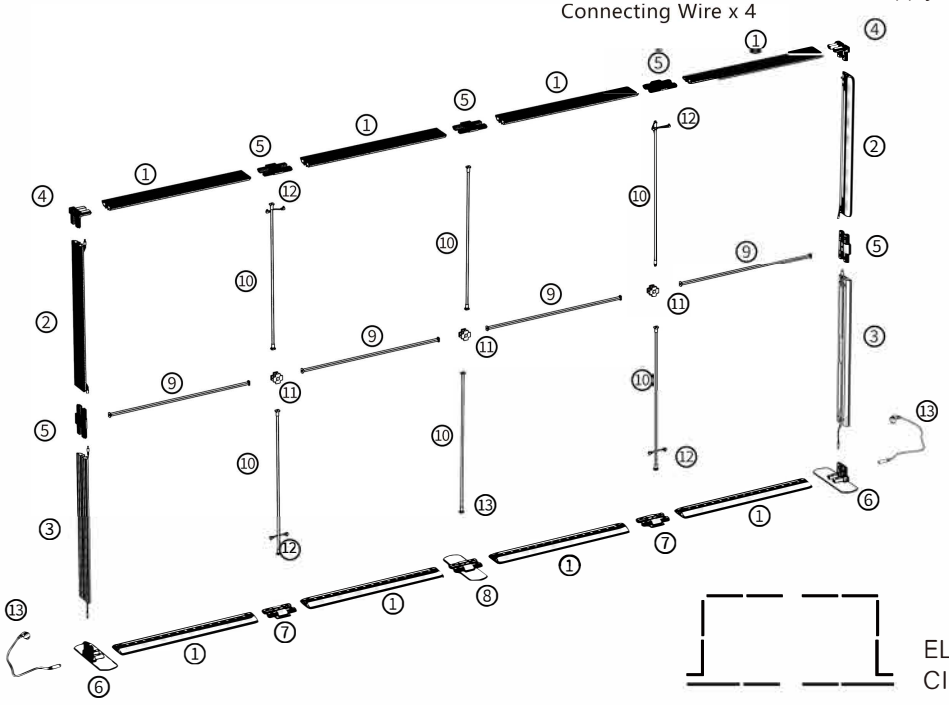

ELECTRIC
CIRCUIT LAYOUT

1

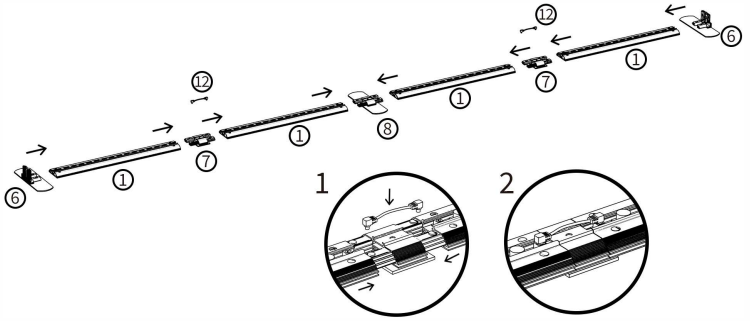

2

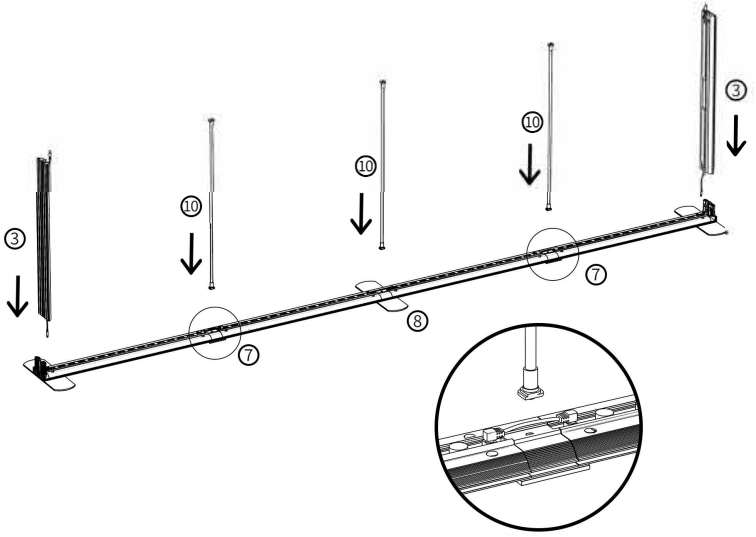

3

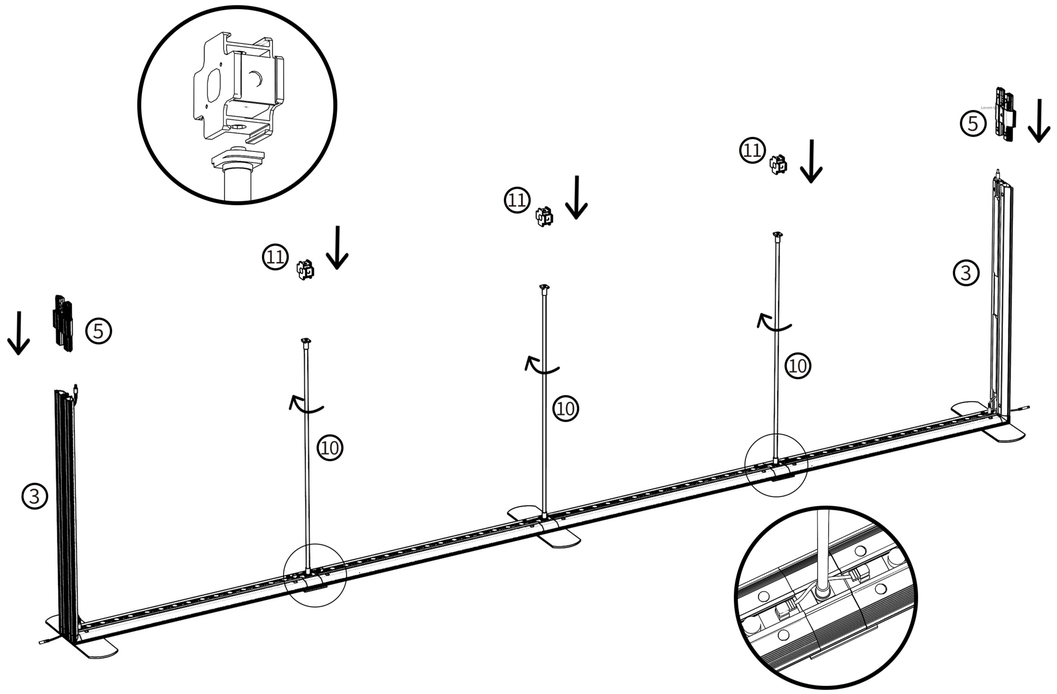

4

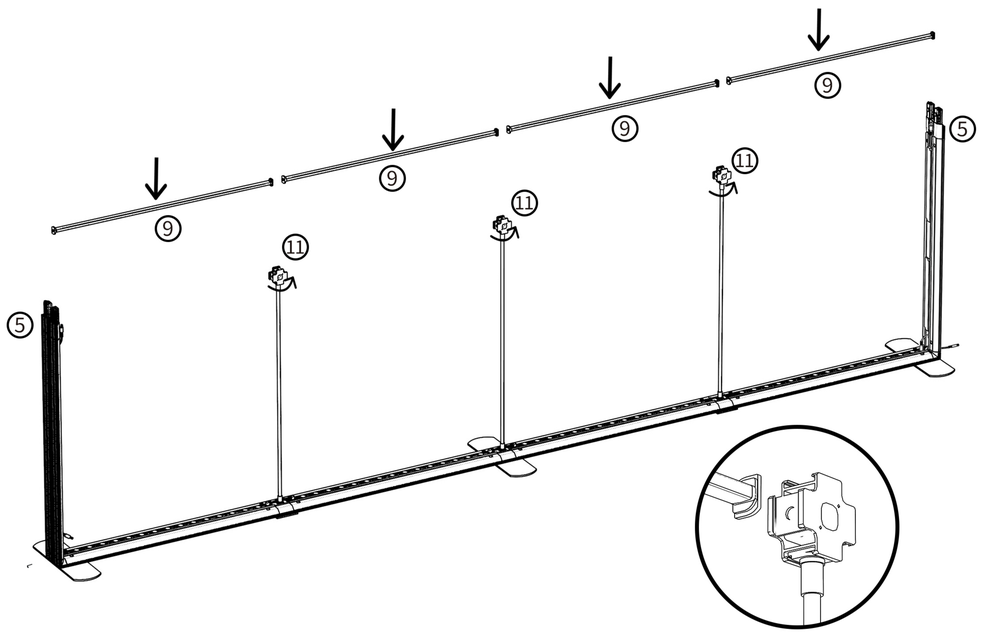

5

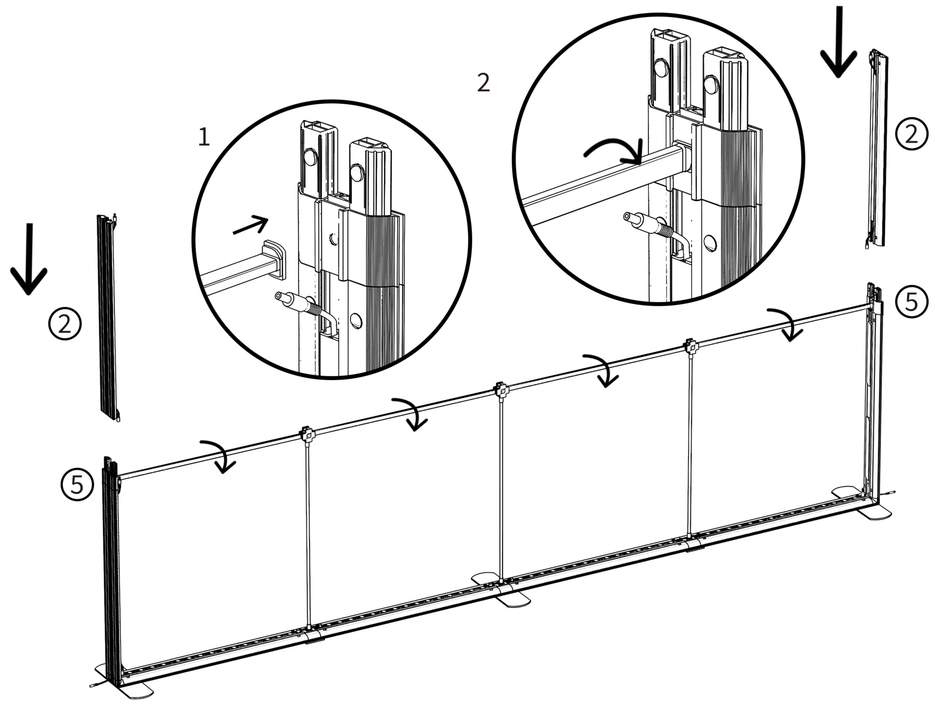

6

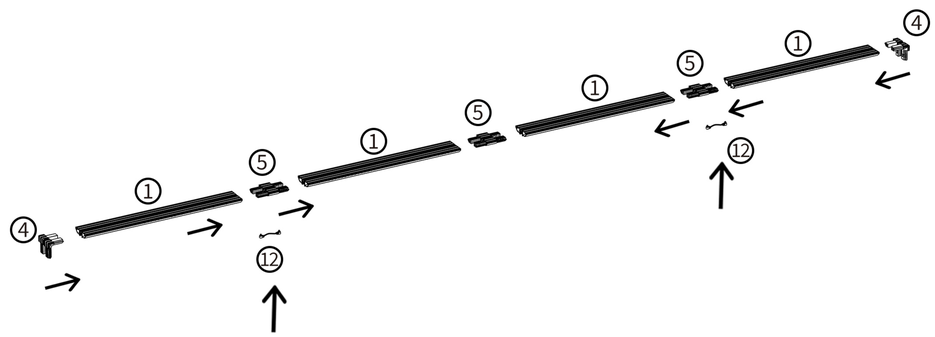

7

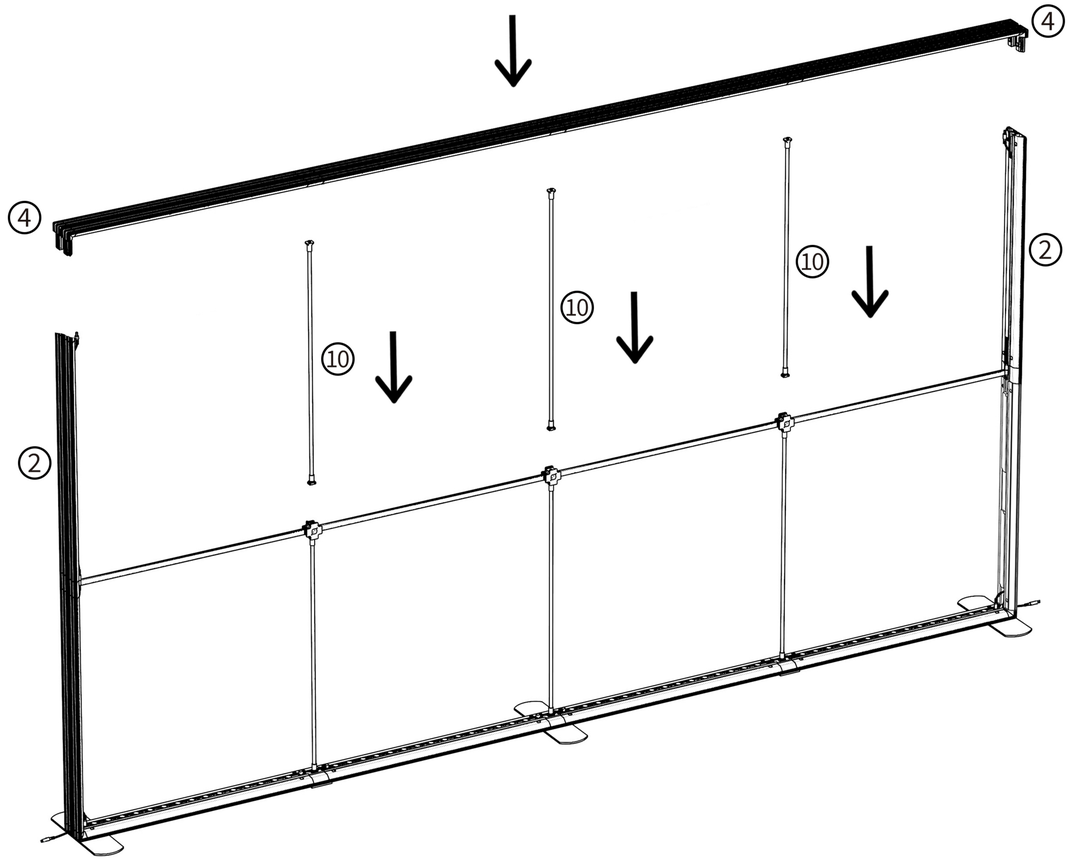

8

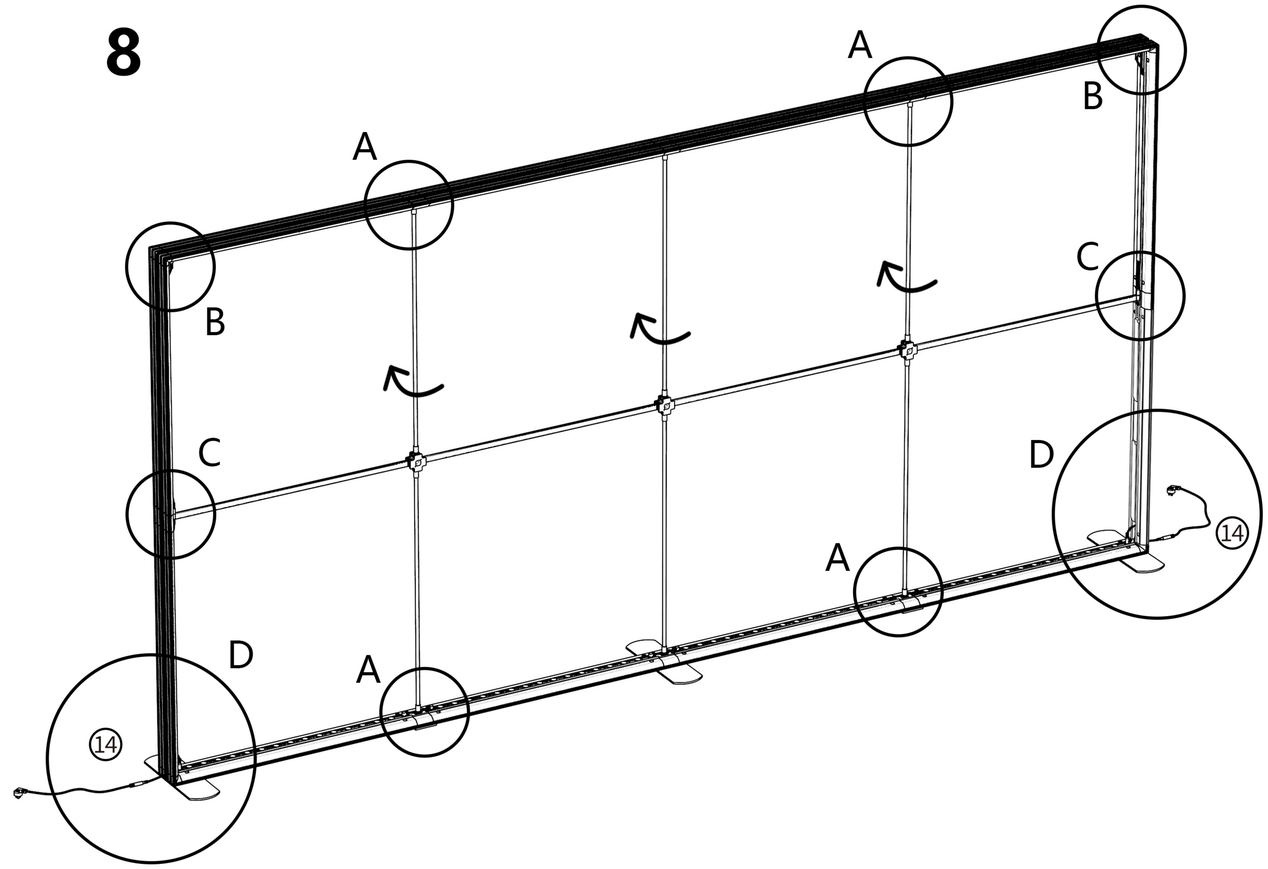

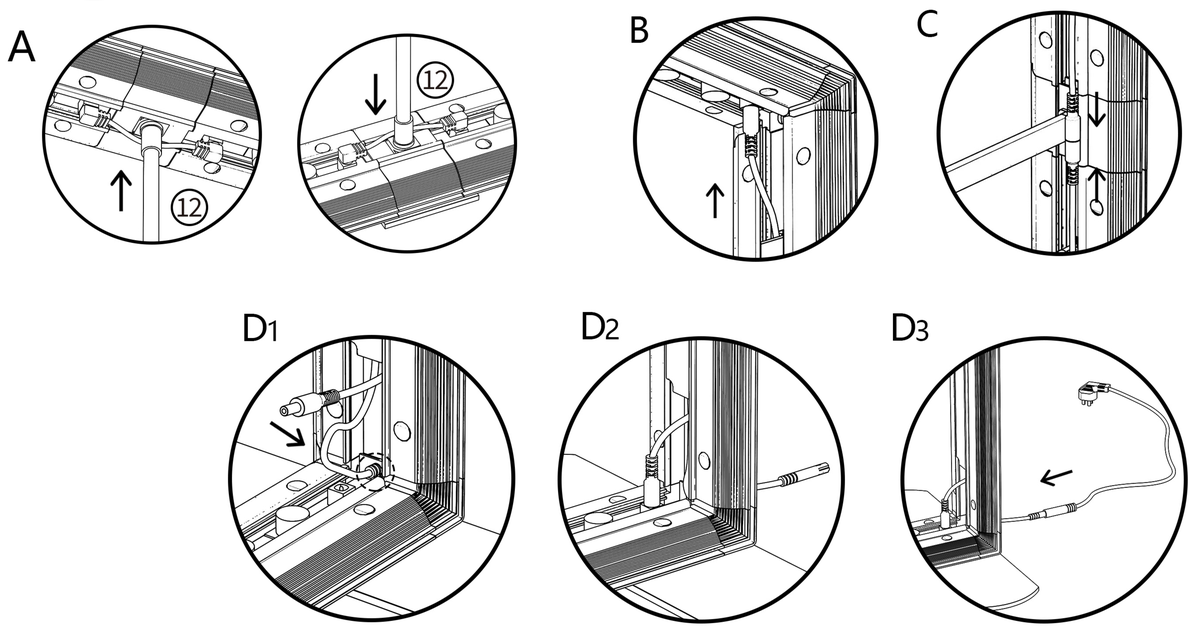
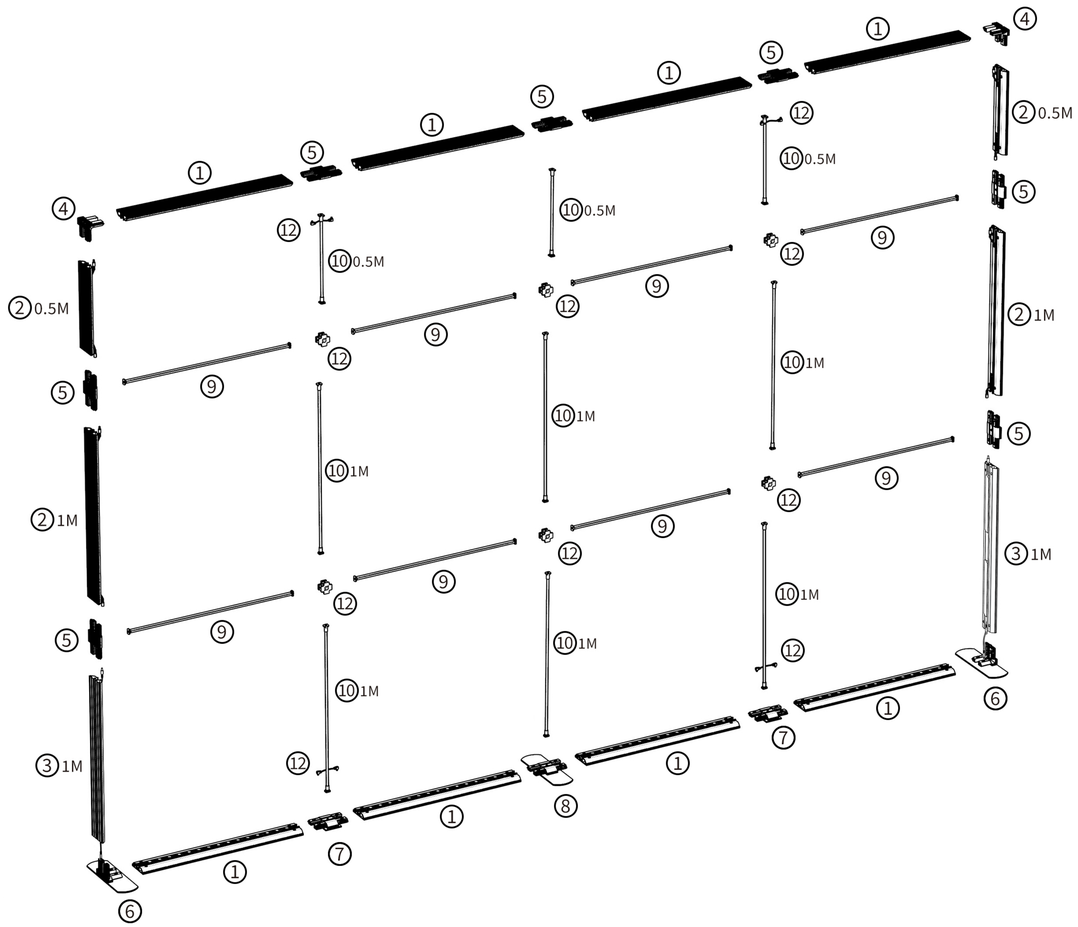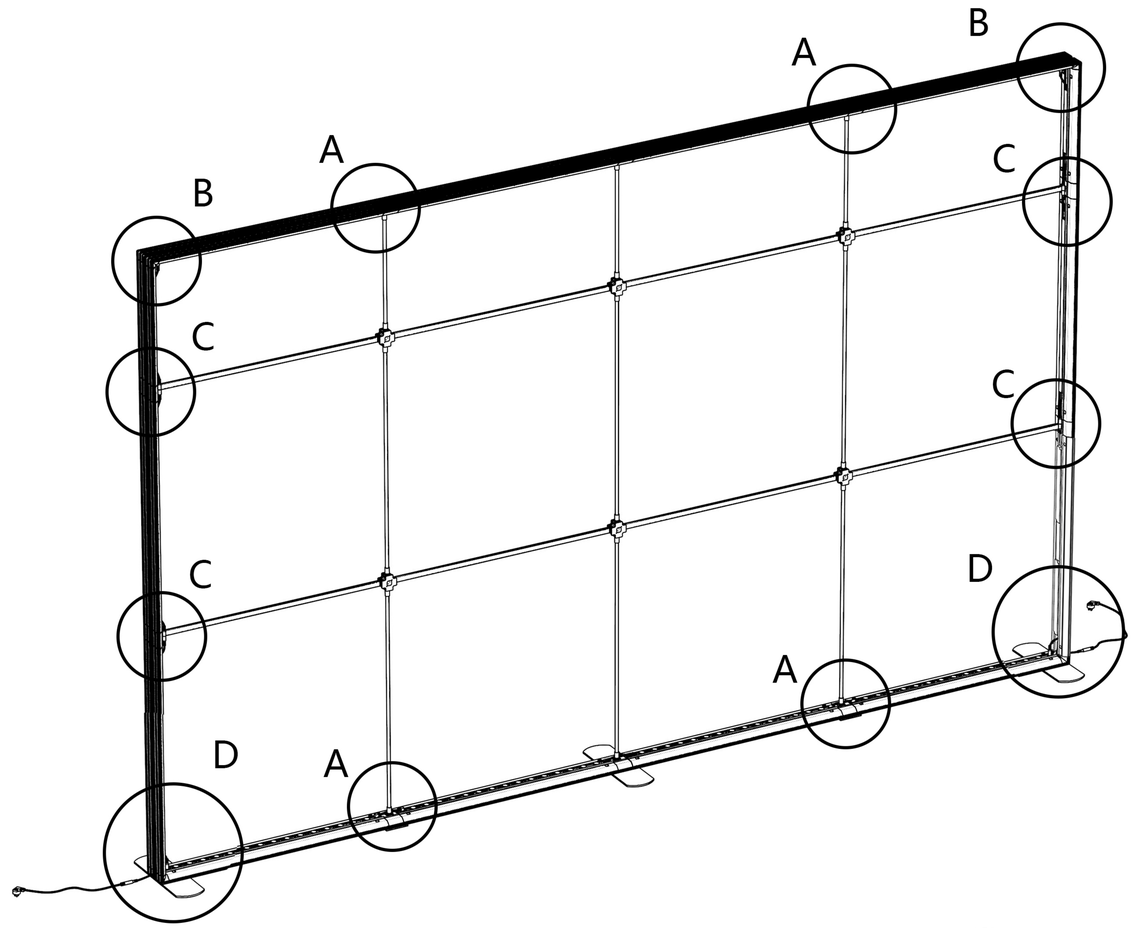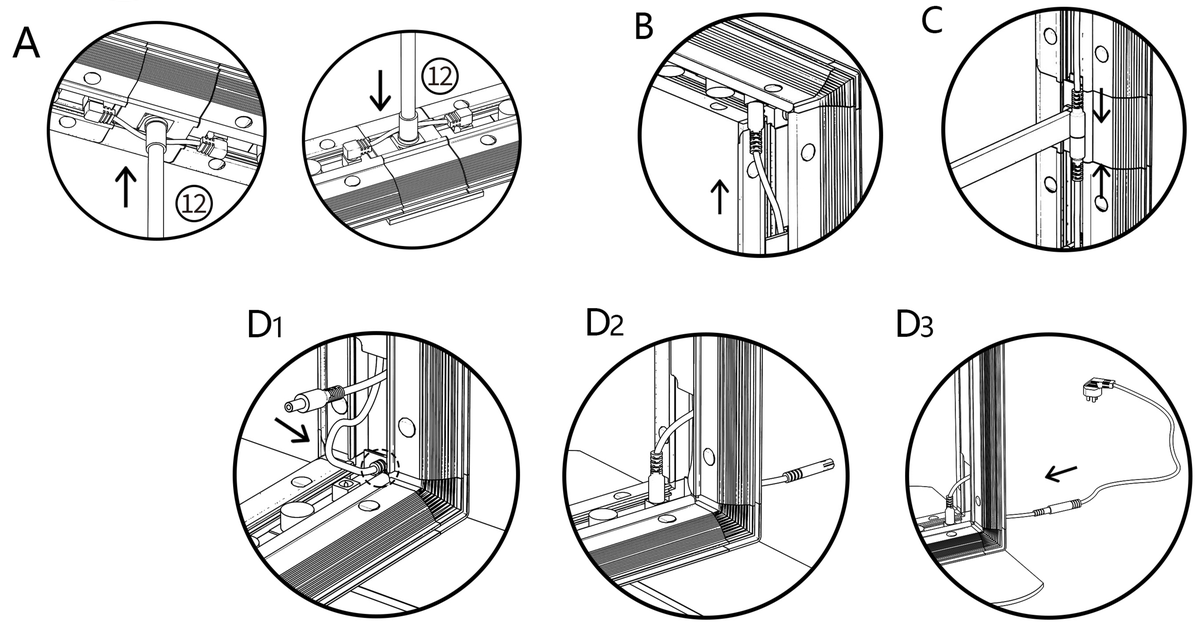
3500/3850/4000X2500(1000+1000+500)