PREMIUM PVC LED LIGHTBOX

Sizes - 2000 Wide

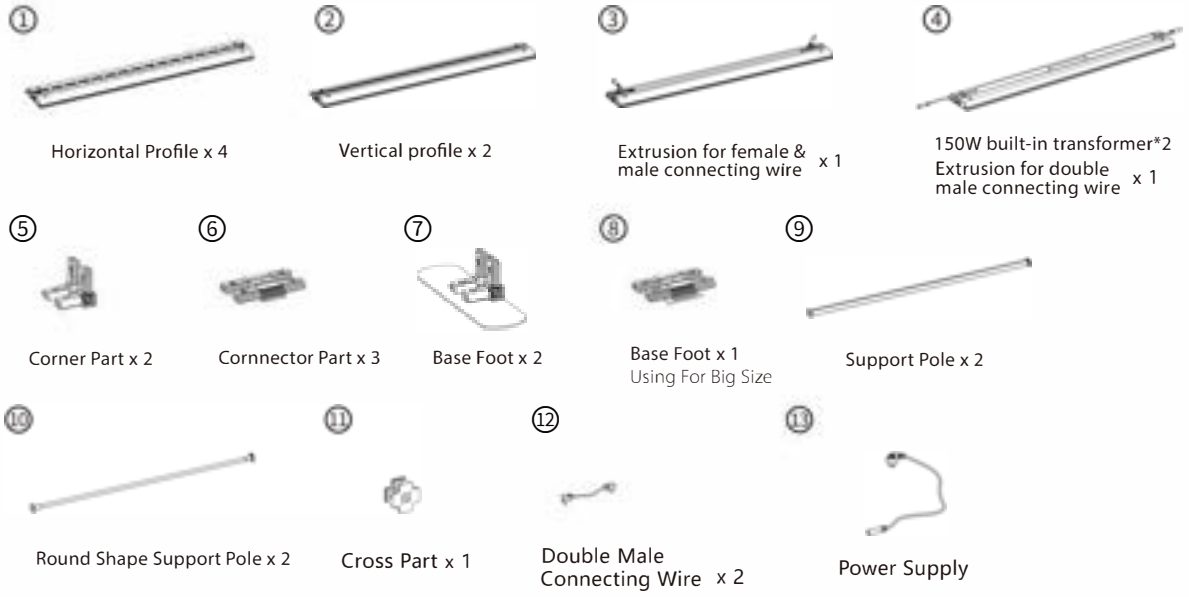

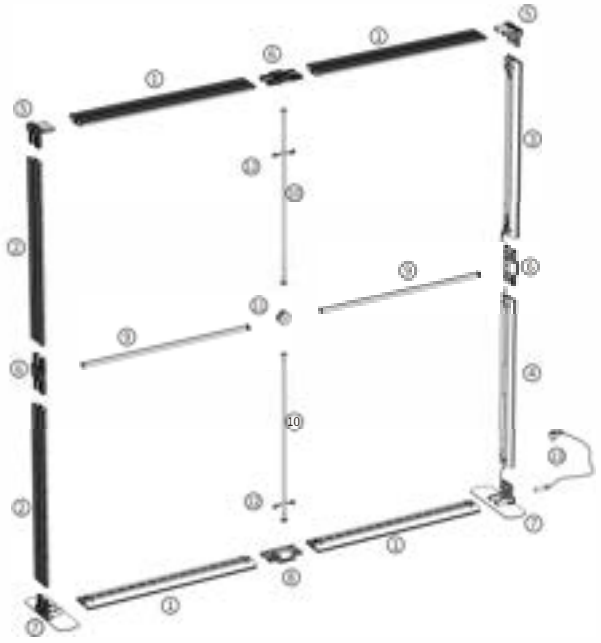

ELECTRIC
CIRCUIT LAYOUT

1

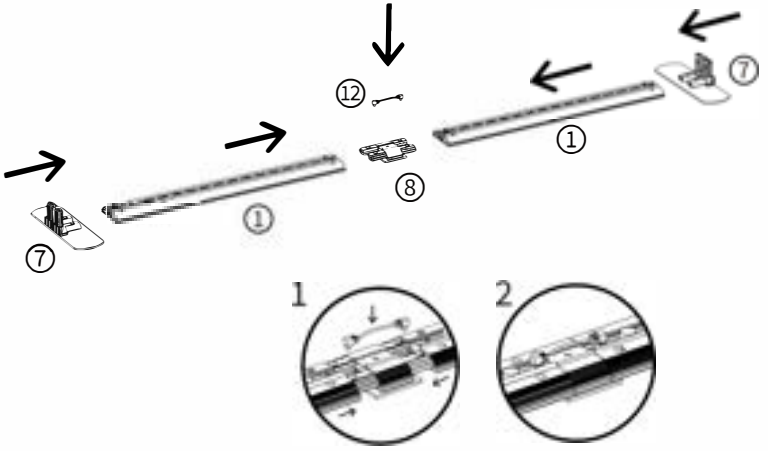

2

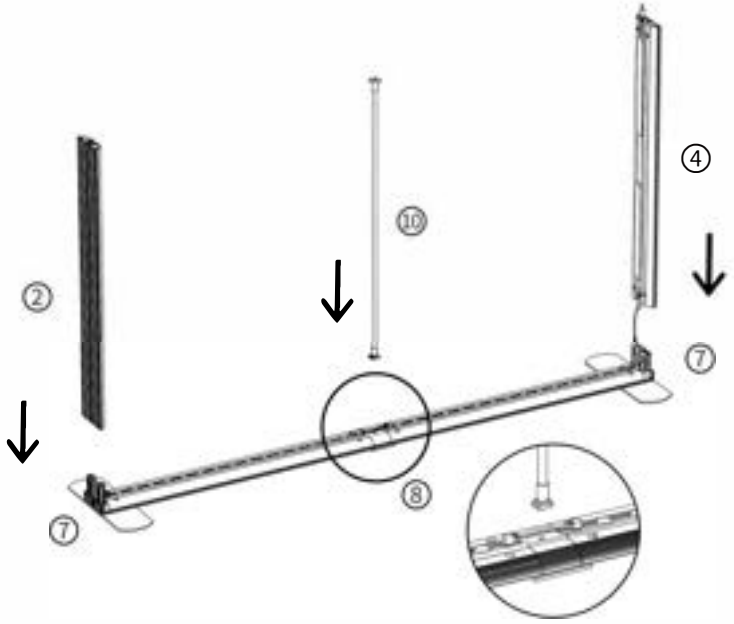

3

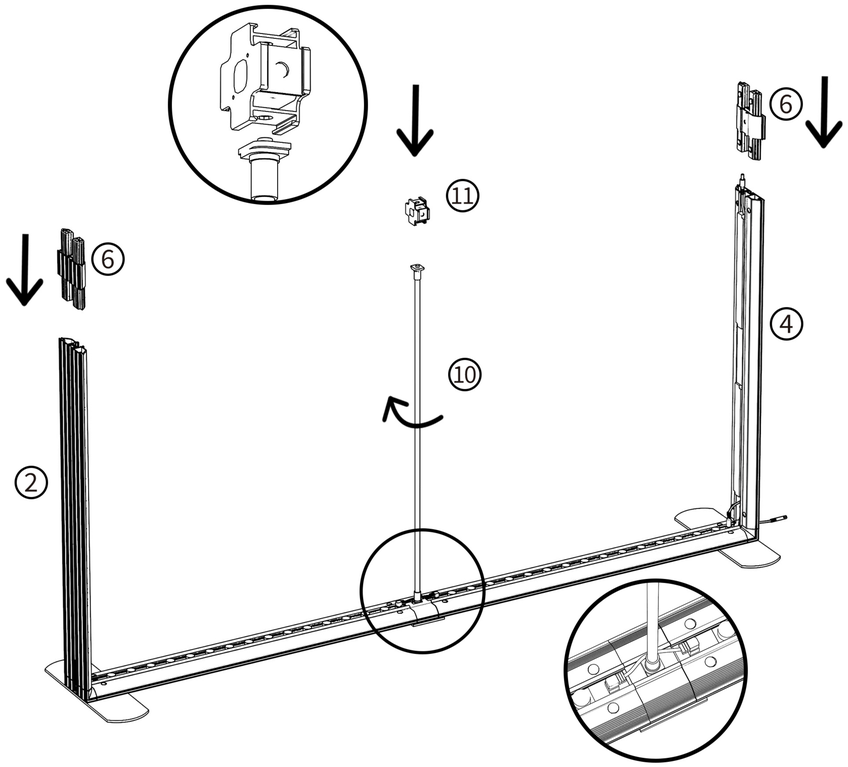

4

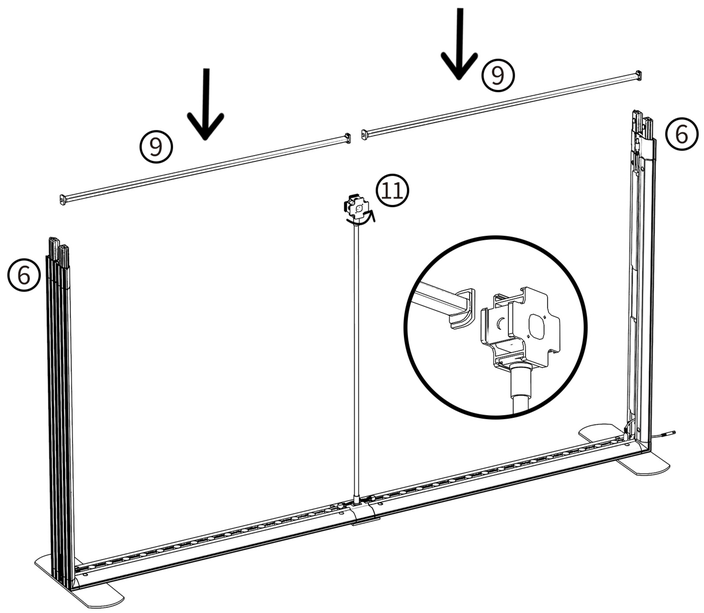

5

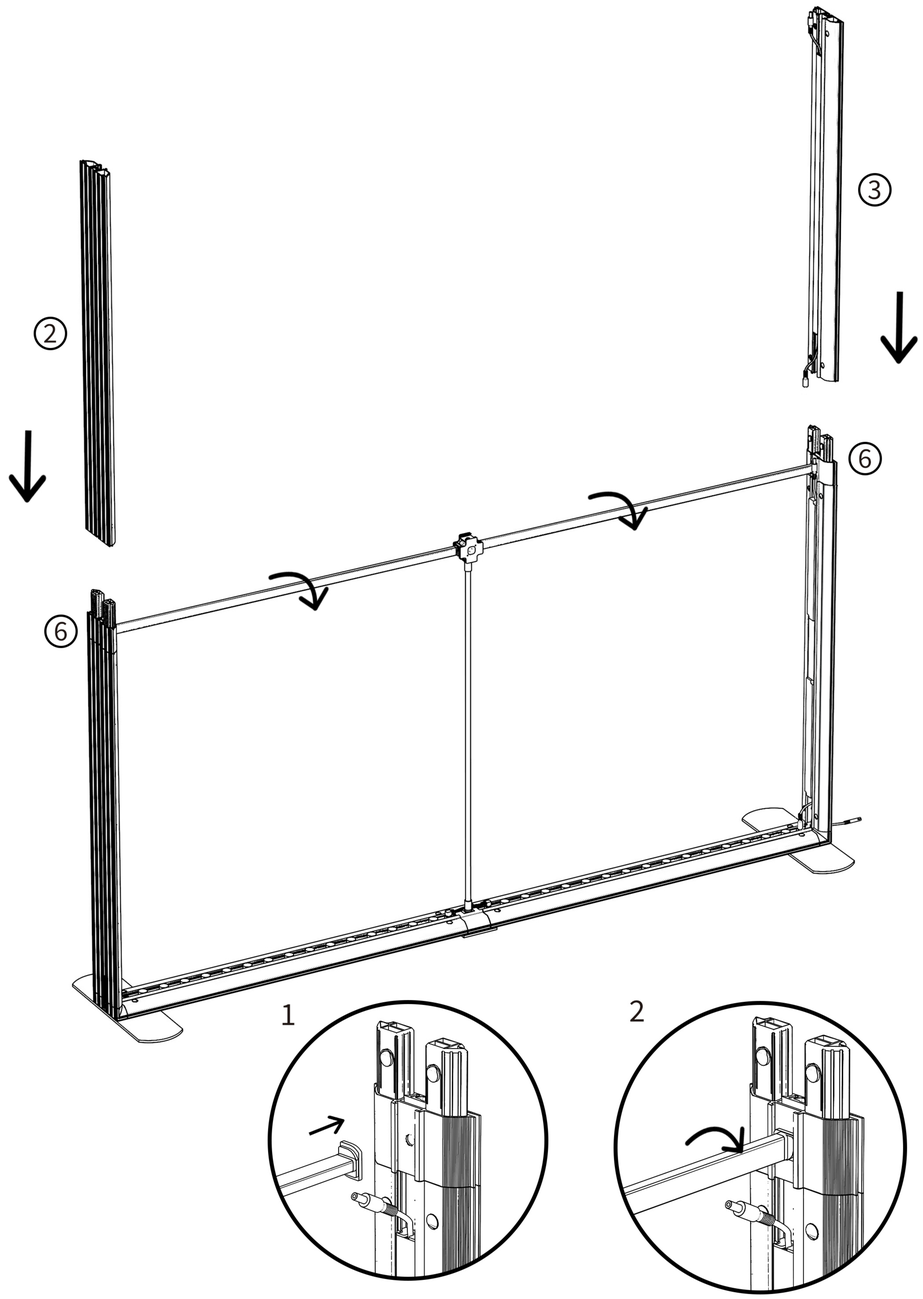

6

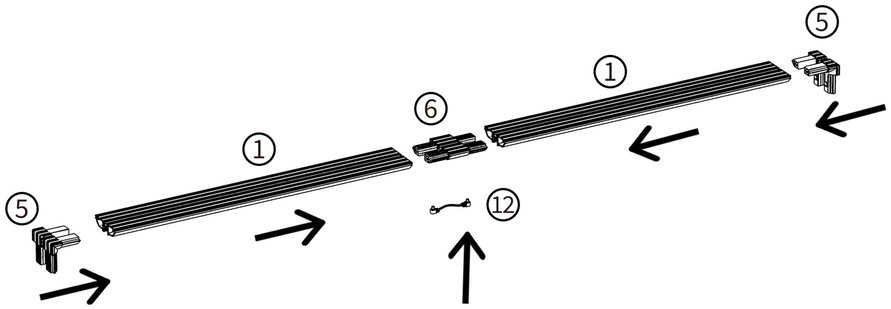

7

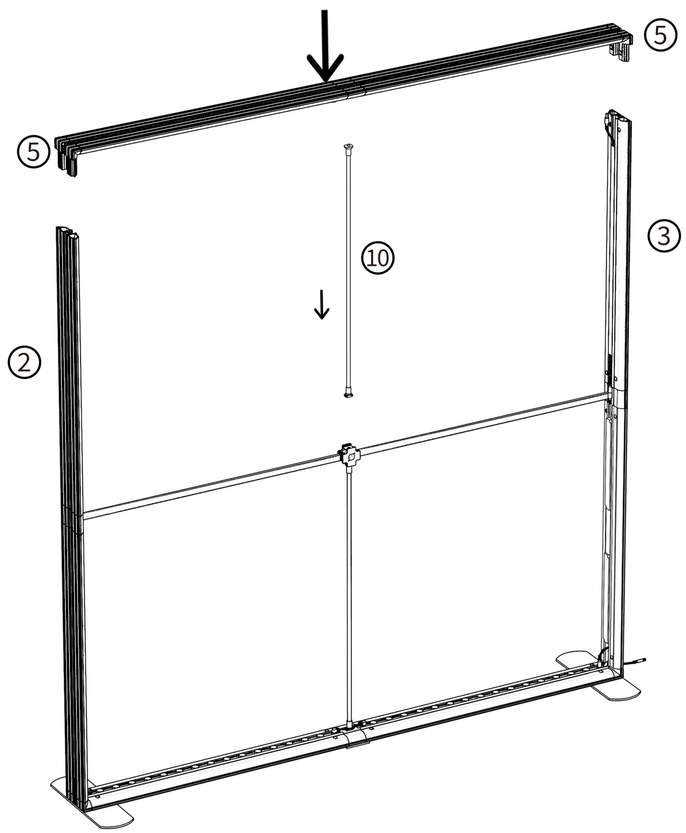

8

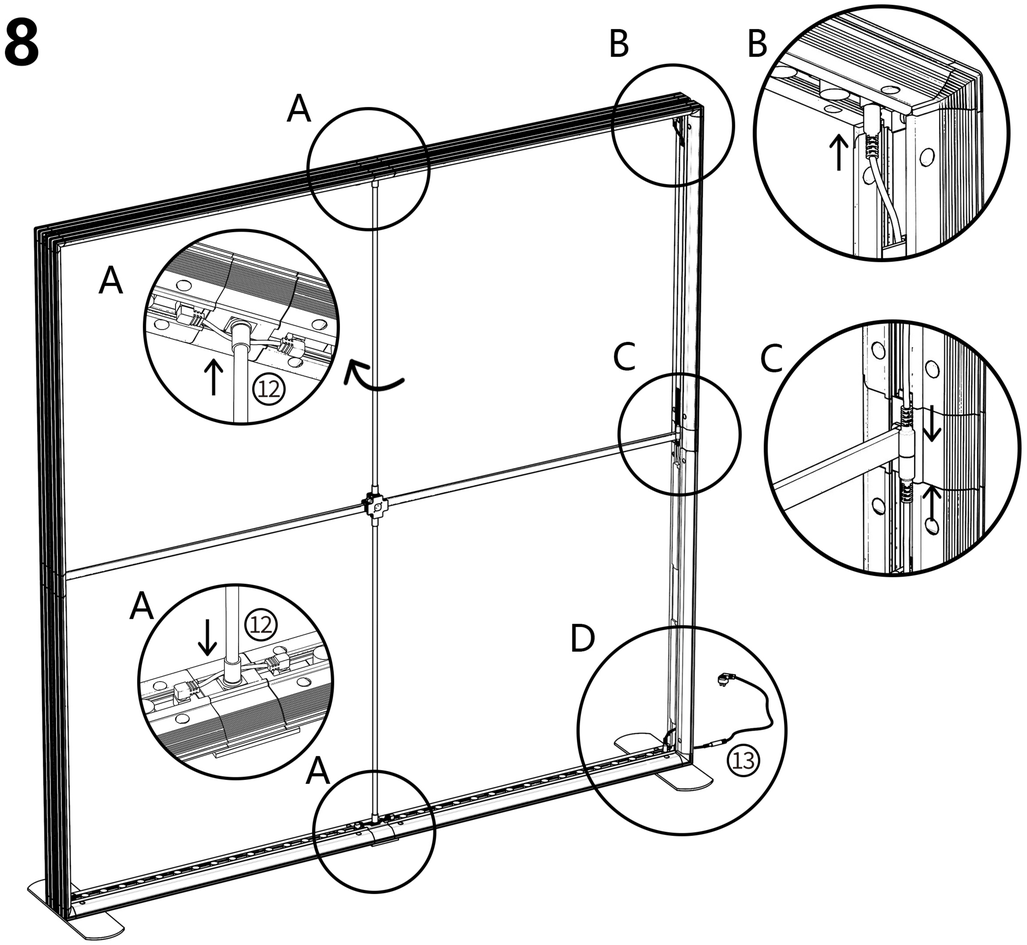

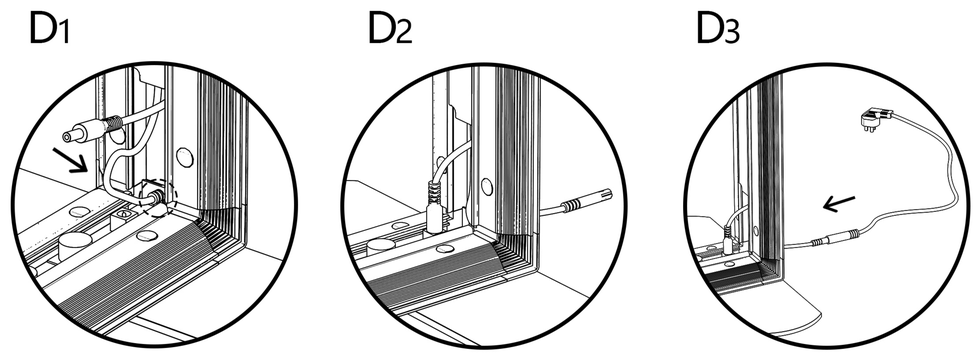
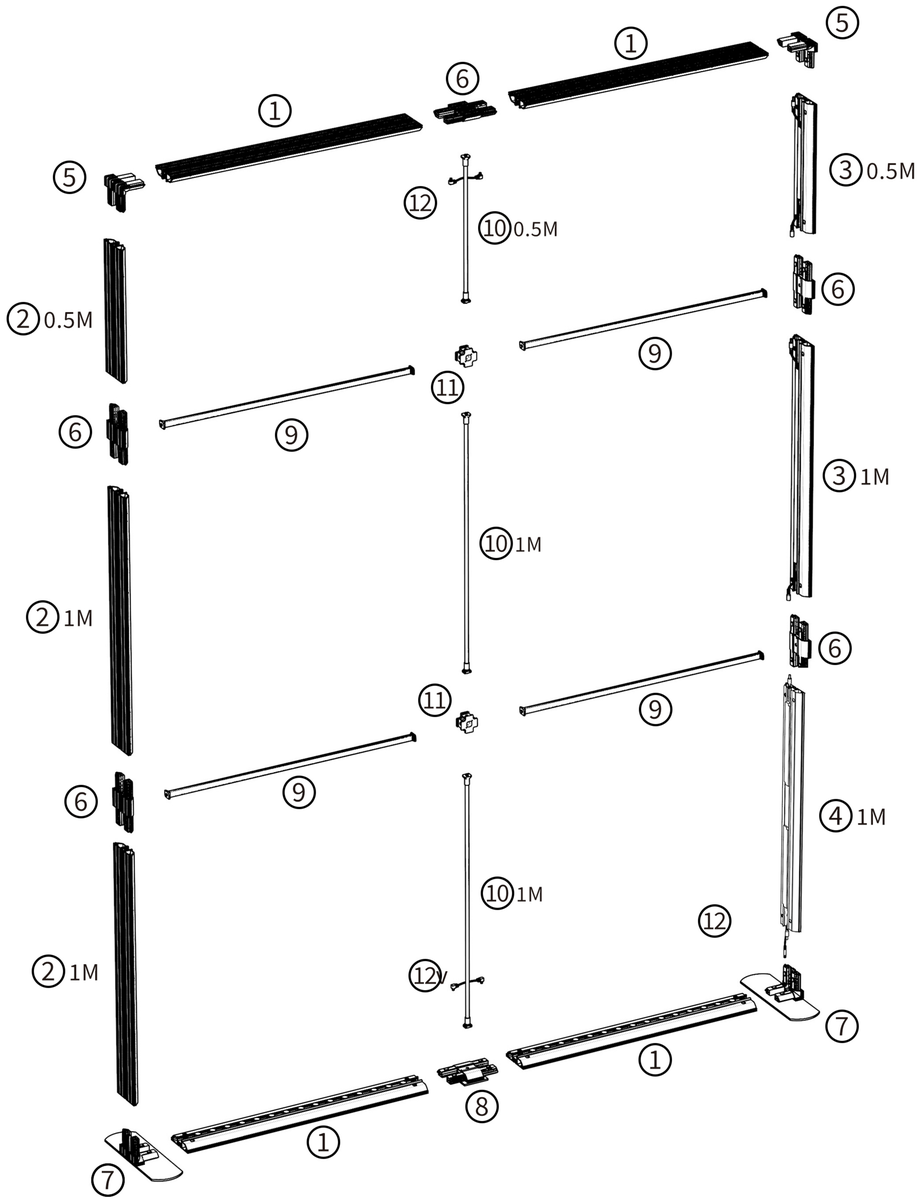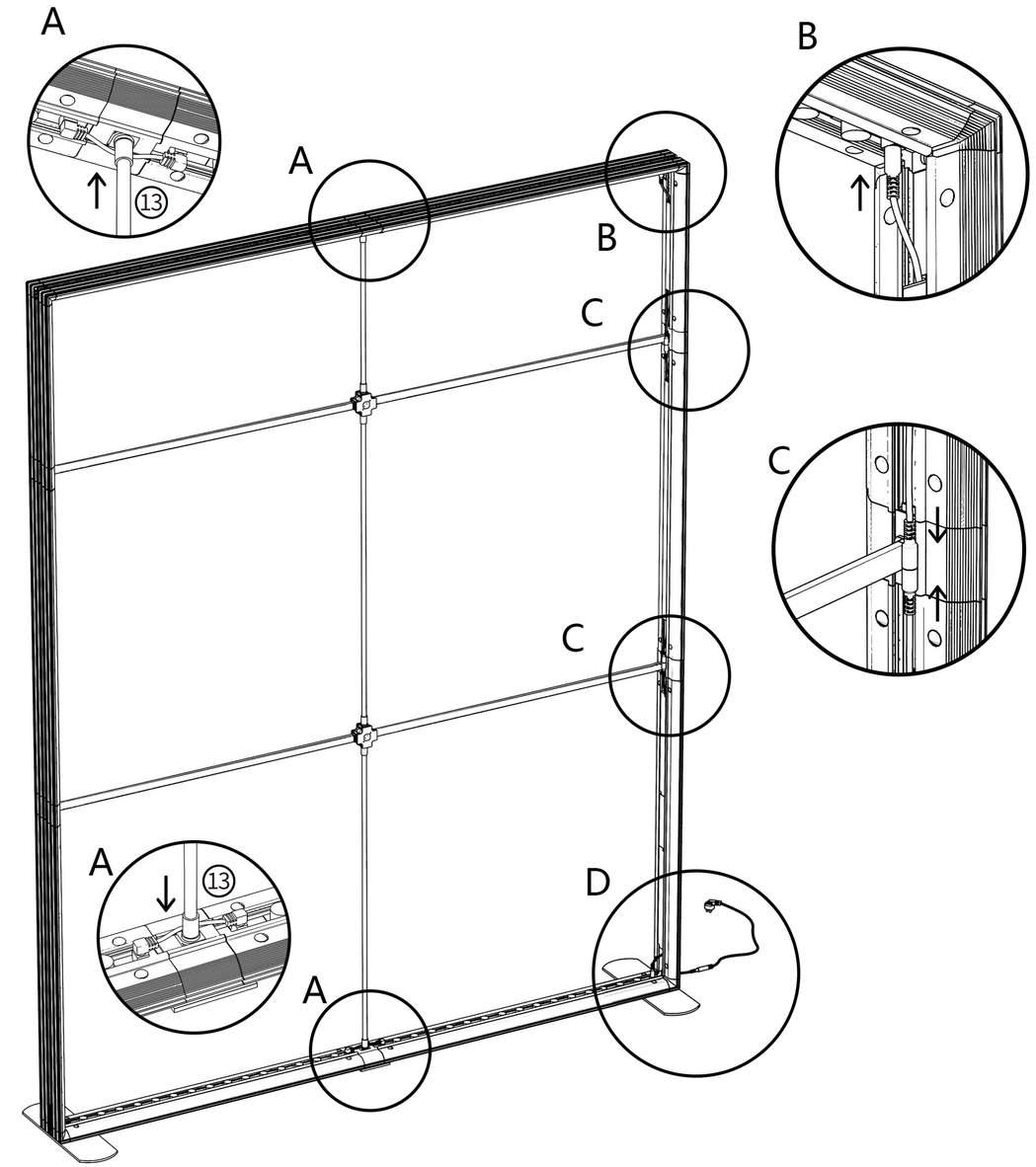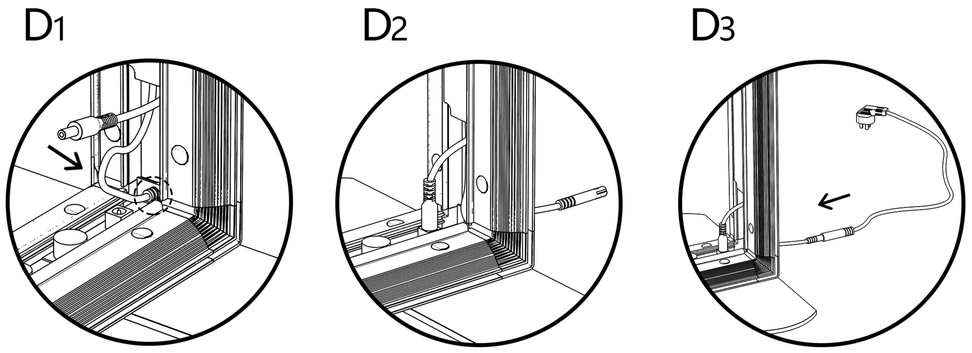
1500/1850/2000X2500(1000+1000+500)