☐ Are images embedded?

☐ Are PANTONE codes embedded?

☐ Have all fonts converted to paths.

☐ At 100% artwork needs to be 72 DPI.

☐ All artwork needs to be layered and not flattened.

🔴 bleed
🔵 cut line
● finished product
╍╍╍ sewing lines
🟢 safe working area
◉ eyelets

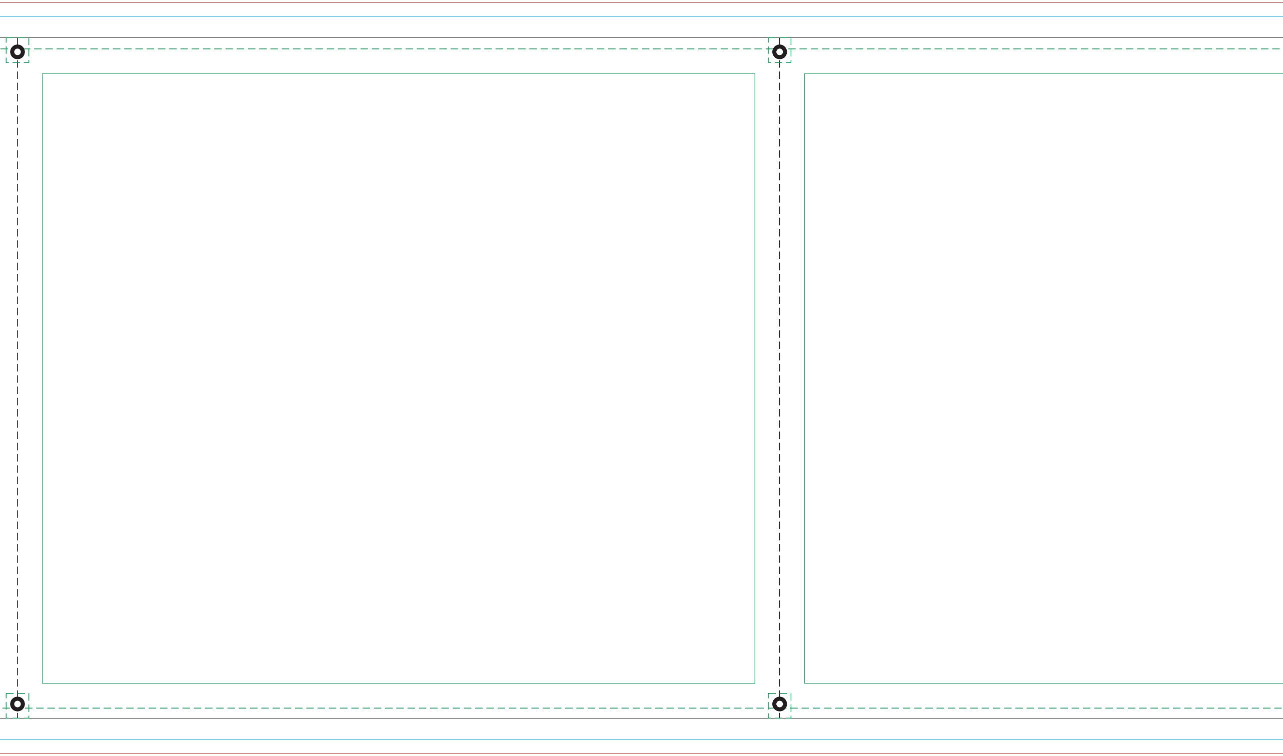

50% Scale

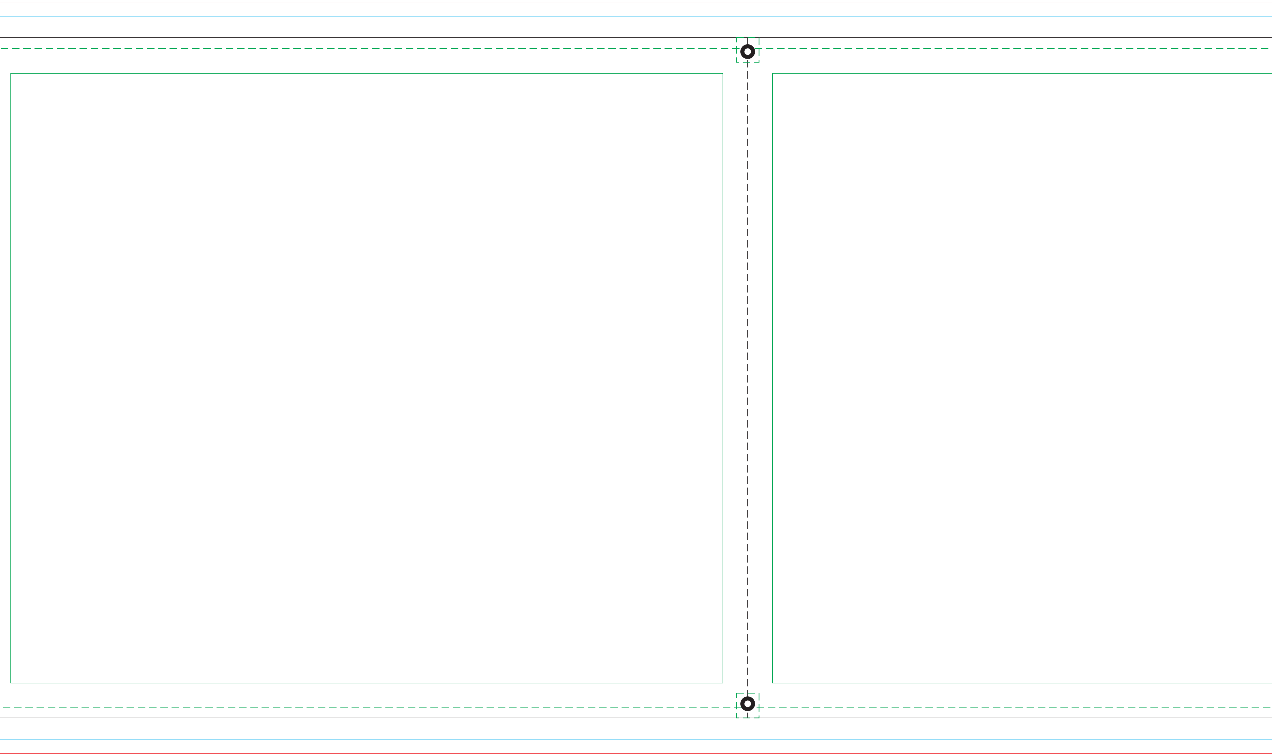

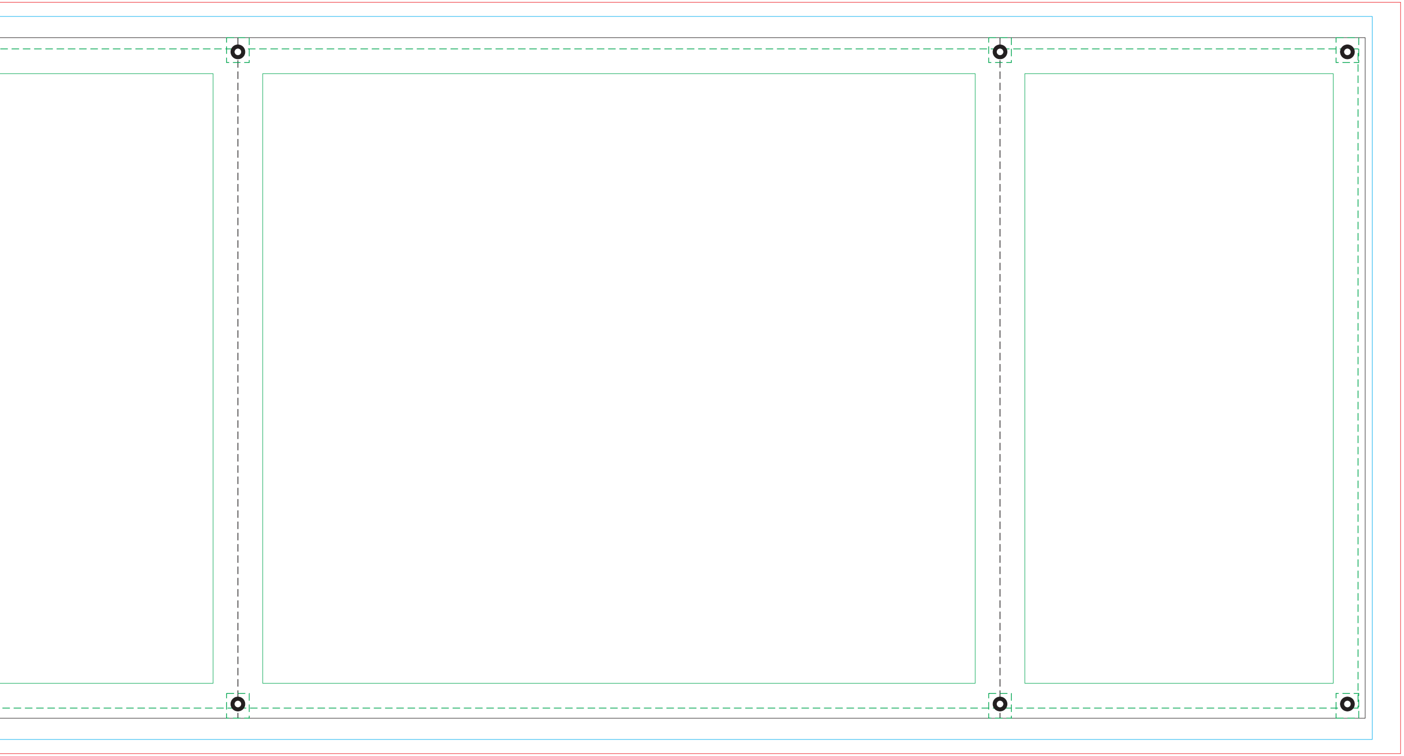

Event Table - 7 Sided